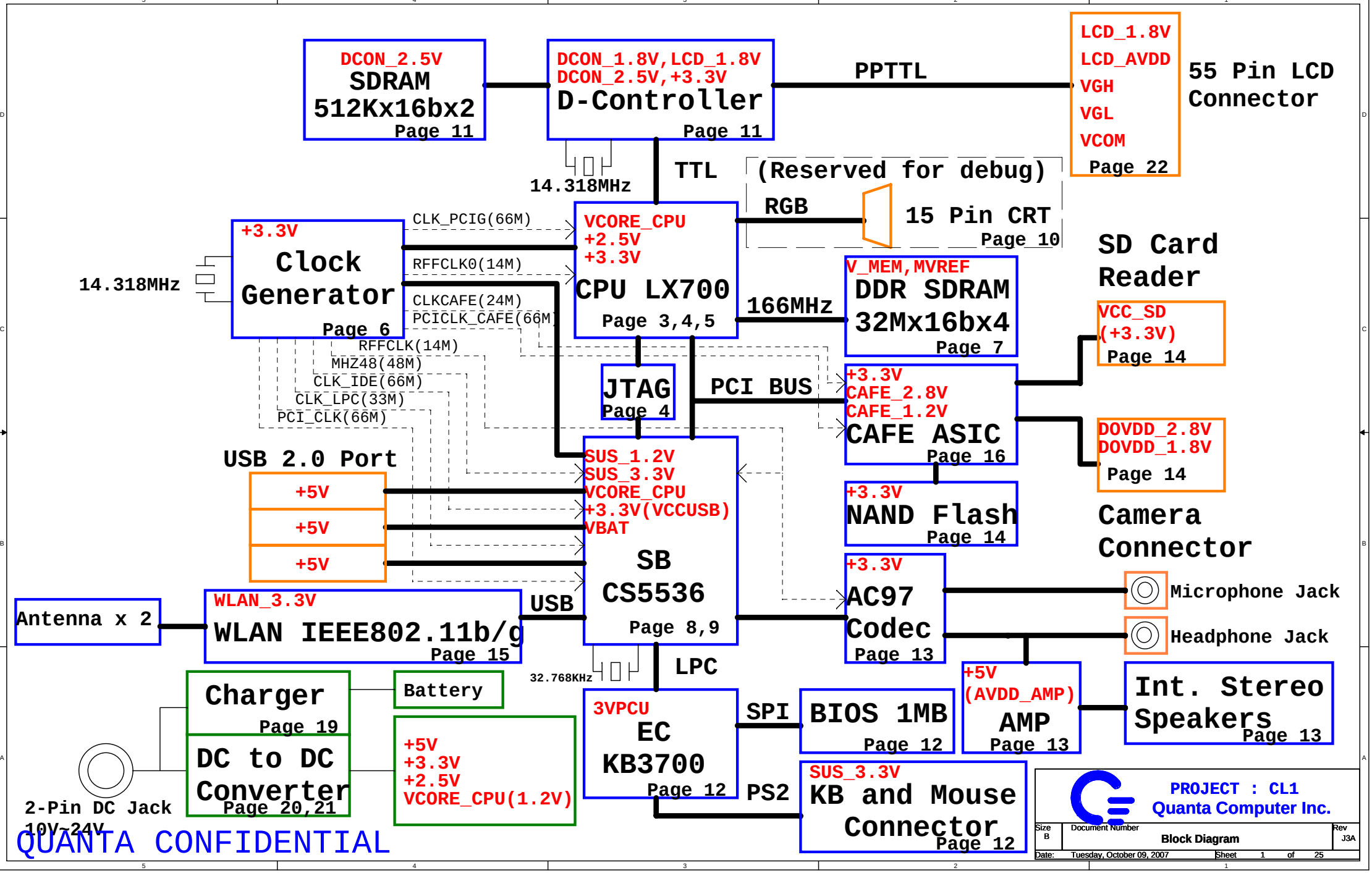
DCON_2.5V
SDRAM
512Kx16bx2
Page 11
DCON_1.8V,LCD_1.8V
DCON_2.5V,+3.3V
D-Controller
Page 11
PPTTL
LCD_1.8V
LCD_AVDD
VGH
VGL
VCOM
Page 22
55 Pin LCD Connector
14.318MHz
TTL
(Reserved for debug)
RGB
15 Pin CRT
Page 10
+3.3V
Clock Generator
Page 6
14.318MHz
CLK_PCIG(66M)
RFFCLK0(14M)
CLKCAFE(24M)
PCICLK_CAFE(66M)
RFFCLK(14M)
MHZ48(48M)
CLK_IDE(66M)
CLK_LPC(33M)
PCI_CLK(66M)
VCORE_CPU
+2.5V
+3.3V
CPU LX700
Page 3,4,5
166MHz
V_MEM,MVREF
DDR SDRAM
32Mx16bx4
Page 7
SD Card Reader
VCC_SD
(+3.3V)
Page 14
JTAG
Page 4
PCI BUS
+3.3V
CAFE_2.8V
CAFE_1.2V
CAFE ASIC
Page 16
DOVDD_2.8V
DOVDD_1.8V
Page 14
USB 2.0 Port
+5V
+5V
+5V
SUS_1.2V
SUS_3.3V
VCORE_CPU
+3.3V(VCCUSB)
VBAT
SB
CS5536
Page 8,9
+3.3V
NAND Flash
Page 14
Camera Connector
+3.3V
AC97
Codec
Page 13
Microphone Jack
Headphone Jack
Antenna x 2
WLAN_3.3V
WLAN IEEE802.11b/g
Page 15
USB
32.768KHz
LPC
Charger
Page 19
Battery
DC to DC Converter
Page 20,21
+5V
+3.3V
+2.5V
VCORE_CPU(1.2V)
3VPCU
EC
KB3700
Page 12
SPI
BIOS 1MB
Page 12
+5V
(AVDD_AMP)
AMP
Page 13
Int. Stereo Speakers
Page 13
PS2
SUS_3.3V
KB and Mouse Connector
Page 12
2-Pin DC Jack
10V~24V
QUANTA CONFIDENTIAL
PROJECT : CL1
Quanta Computer Inc.
Size B
Document Number
Block Diagram
Rev J3A
Date: Tuesday, October 09, 2007
Sheet 1 of 25

Voltage Rails	Voltage	S0	S3	S5	Power Source	Control Signal
VBAT	3V	ON	ON	ON	RTC-BATTERY	ALWAYS
3VPCU	3.3V	ON	ON	ON	VIN	ALWAYS
WLAN_3.3V	3.3V	ON	ON	ON	VIN	WLAN_EN
SUS_3.3V	3.3V	ON	ON	OFF	3VPCU	VR_ON#
SUS_1.2V	1.2V	ON	ON	OFF	SUS_3.3V	SUS_3.3V
V_MEM	2.5V	ON	ON	OFF	VIN	SUS_ON/MAIN_ON
MVREF	1.25V	ON	ON	OFF	V_MEM	V_MEM
+5V	5V	ON	OFF	OFF	VIN	PWR_ON
+3.3V	3.3V	ON	OFF	OFF	WLAN_3.3V	PWR_ON
+2.5V	2.5V	ON	OFF	OFF	V_MEM	PWR_ON
VCORE_CPU	1.2V	ON	OFF	OFF	VIN	MAIN_ON
~~VCORE_SB~~	~~1.2V~~	~~ON~~	~~OFF~~	~~OFF~~	~~VCORE_CPU~~	~~VCORE_CPU~~
VCCUSB	3.3V	ON	OFF	OFF	+3.3V	+3.3V
USBVDD	5V	ON	OFF	OFF	+5V	USB_PWR_EN1
LCD_1.8V	1.8V	ON	ON	OFF	DCON_1.8V	VDDEN
LCD_AVDD	9.6V	ON	ON	OFF	VIN	VDDEN
VGH	18V	ON	ON	OFF	VIN	VDDEN
VGL	-7V	ON	ON	OFF	VIN	VDDEN
VCOM	2.2V	ON	ON	OFF	LCD_AVDD	COLMODE
AVDD_AMP	5V	ON	OFF	OFF	+5V	+5V
VCC_SD	3.3V	ON	OFF	OFF	+3.3V	SD_ON
DCON_2.5V	2.5V	ON	ON	OFF	V_MEM	DCON_1.8V
DCON_1.8V	1.8V	ON	ON	OFF	DCON_2.5V	DCON_EN
LEDPWR	17.6V	ON	ON	OFF	VIN	BACKLIGHT
DVDD_1.8V	1.8V	ON	OFF	OFF	+3.3V	+3.3V
DOVDD_2.8V	2.8V	ON	OFF	OFF	+3.3V	Cam_GPIO2
CAFE_1.2V	1.2V	ON	OFF	OFF	VCORE_CPU	VCORE_CPU

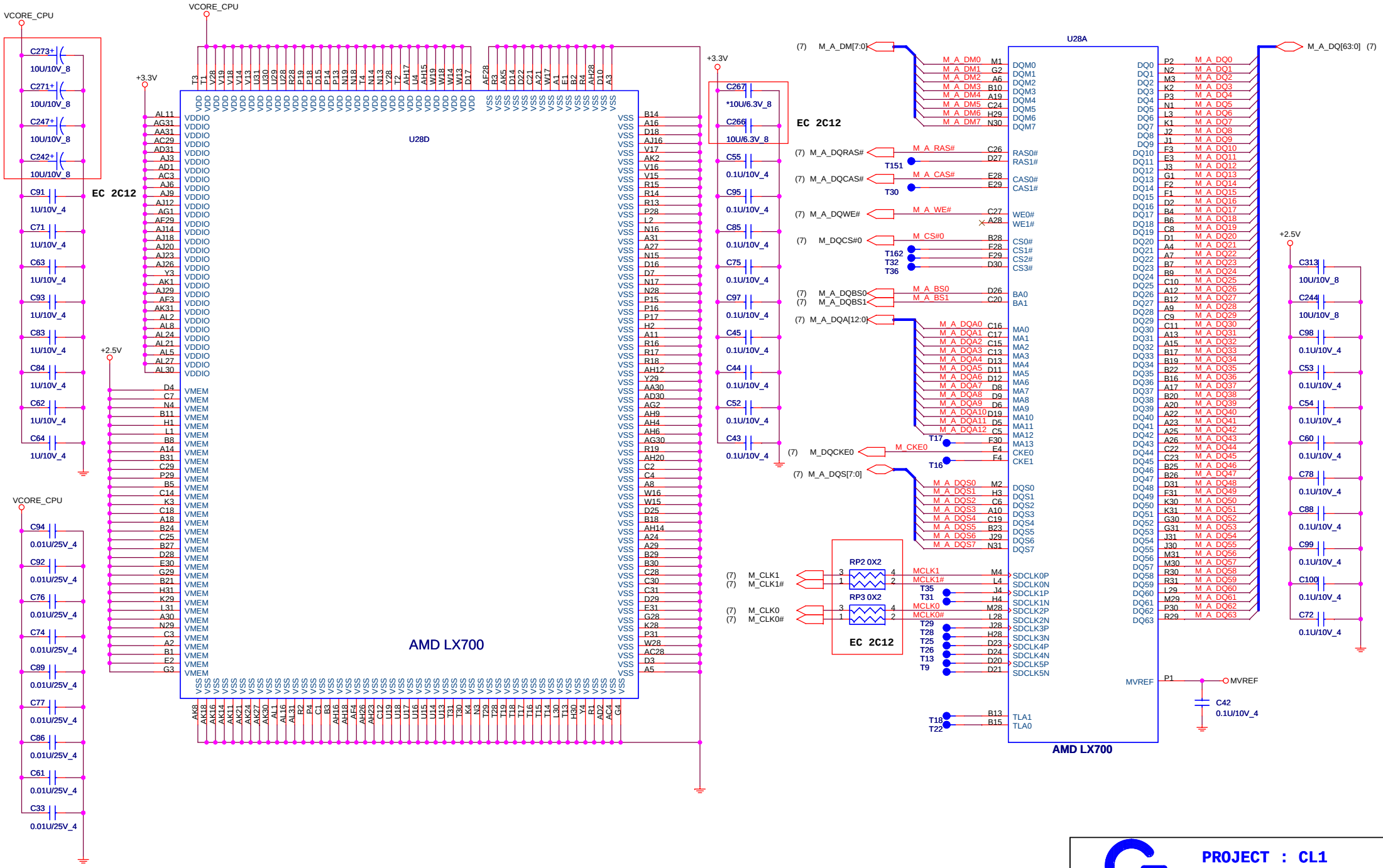

QUANTA CONFIDENTIAL

PROJECT : CL1
Quanta Computer Inc.

Size	Document Number	Rev
Custom	LX Processor / Memory	J3A

Date: Tuesday, October 09, 2007 Sheet 3 of 25

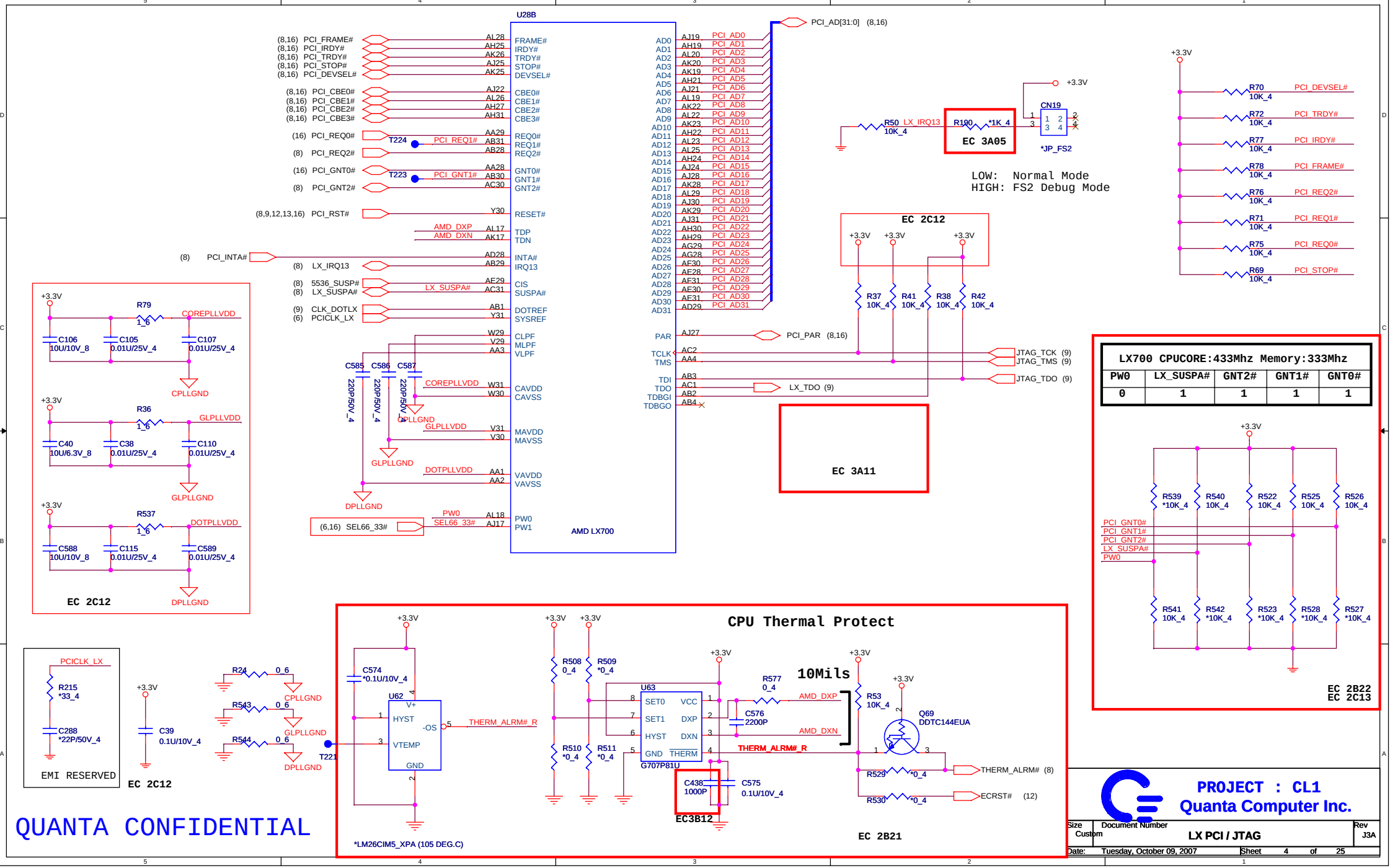
U28B
AMD LX700
(8,16) PCI_FRAME#
(8,16) PCI_IRDY#
(8,16) PCI_TRDY#
(8,16) PCI_STOP#
(8,16) PCI_DEVSEL#
(8,16) PCI_CBE0#
(8,16) PCI_CBE1#
(8,16) PCI_CBE2#
(8,16) PCI_CBE3#
(16) PCI_REQ0#
(8) PCI_REQ2#
(16) PCI_GNT0#
(8) PCI_GNT2#
(8,9,12,13,16) PCI_RST#
(8) PCI_INTA#
(8) LX_IRQ13
(8) 5536_SUSP#
(8) LX_SUSPA#
(9) CLK_DOTLX
(6) PCICLK_LX
(6,16) SEL66_33#
PCI_AD[31:0] (8,16)
PCI_PAR (8,16)
JTAG_TCK (9)
JTAG_TMS (9)
JTAG_TDO (9)
LX_TDO (9)
EC 3A05
*JP_FS2
LOW: Normal Mode
HIGH: FS2 Debug Mode
EC 2C12
EC 3A11
LX700 CPUCORE:433Mhz Memory:333Mhz
PW0 | LX_SUSPA# | GNT2# | GNT1# | GNT0#
0 | 1 | 1 | 1 | 1
EC 2B22
EC 2C13
CPU Thermal Protect
10Mils
G707P81U
*LM26CIM5_XPA (105 DEG.C)
EC3B12
EC 2B21
EMI RESERVED
EC 2C12
QUANTA CONFIDENTIAL
PROJECT : CL1
Quanta Computer Inc.
Size Custom
Document Number
LX PCI / JTAG
Rev J3A
Date: Tuesday, October 09, 2007
Sheet 4 of 25

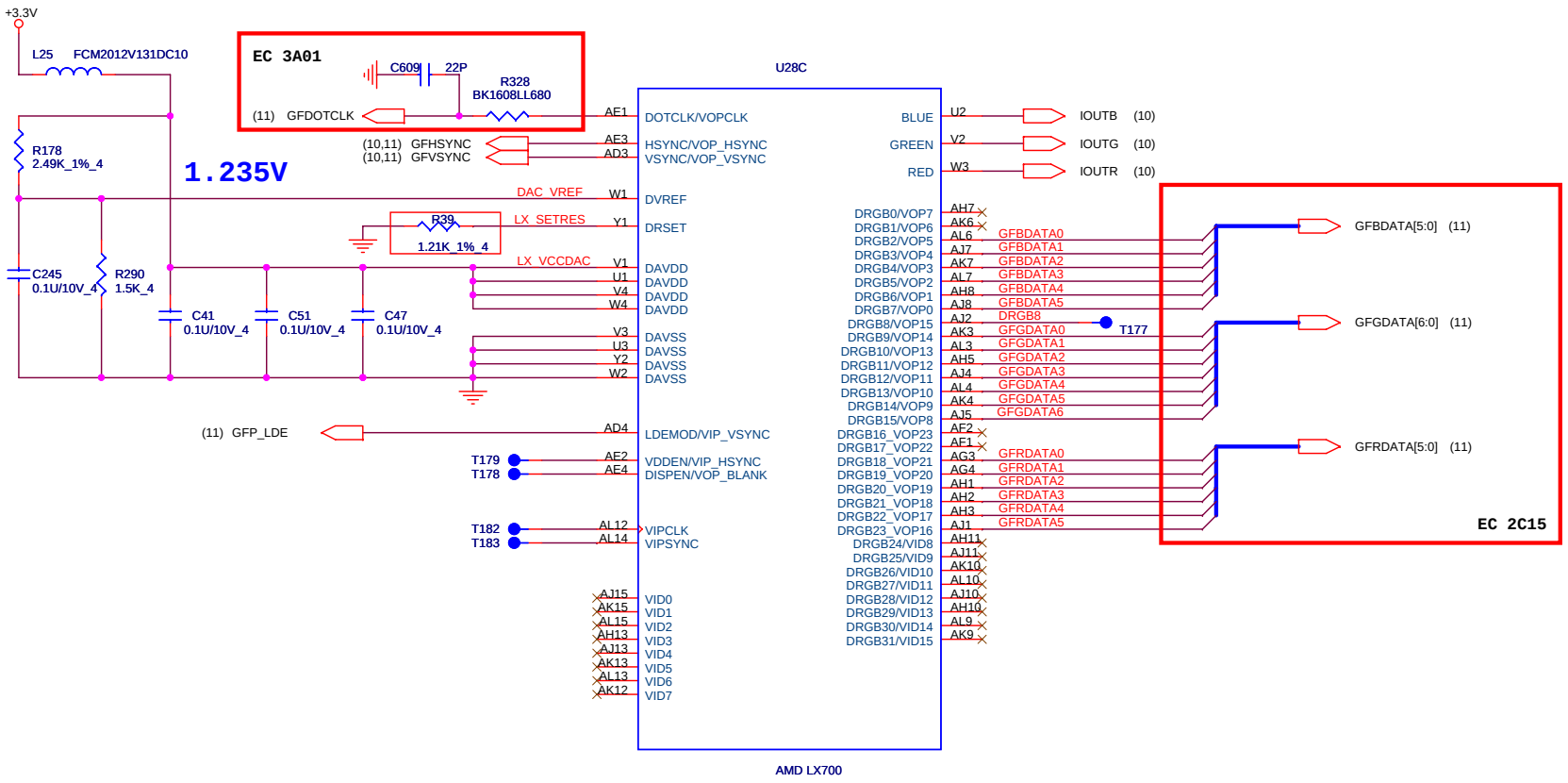

QUANTA CONFIDENTIAL

PROJECT : CL1 Quanta Computer Inc.			
Size B	Document Number LX LCD / CRT		Rev J3A
Date: Tuesday, October 09, 2007	Sheet 5 of 25		

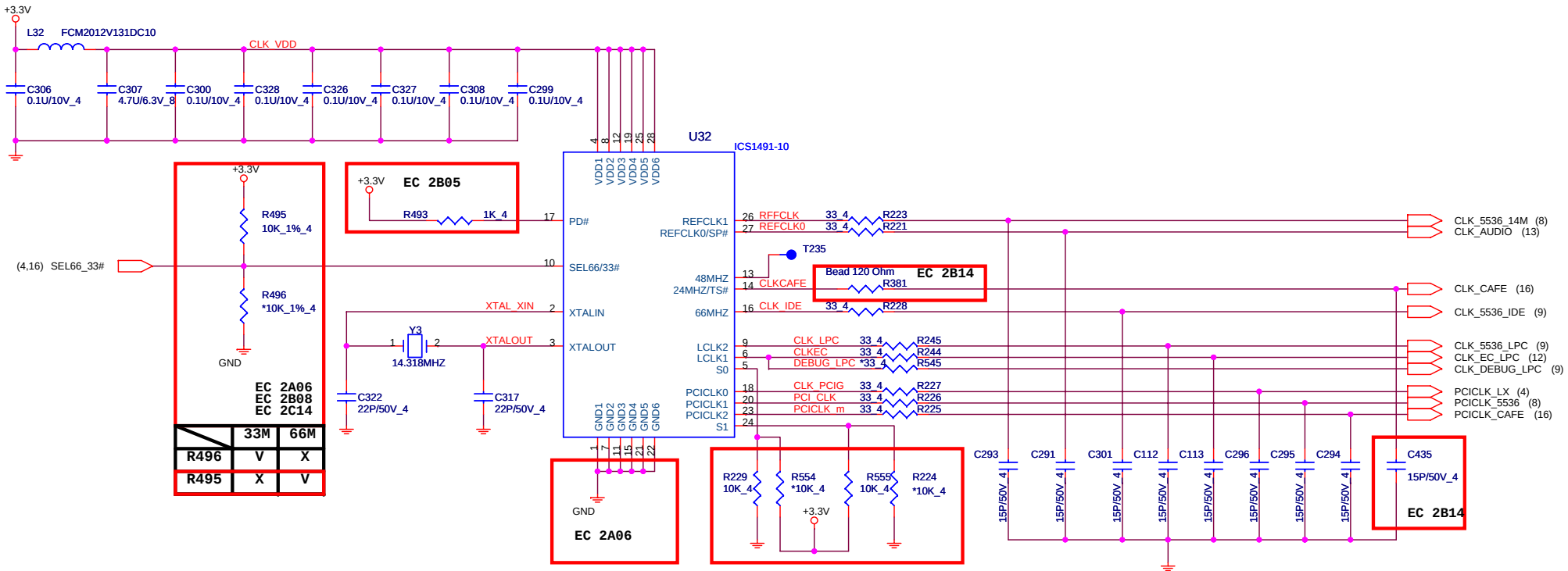

EMI SS	S1	S0
+/-0.5%,C	0	0
0%,Default	0	1
-1%,Down	1	0
-0.5%,Down	1	1

QUANTA CONFIDENTIAL

PROJECT : CL1
Quanta Computer Inc.

Size	Document Number	Rev
B	System Clock	J3A

Date: Tuesday, October 09, 2007 Sheet 6 of 25

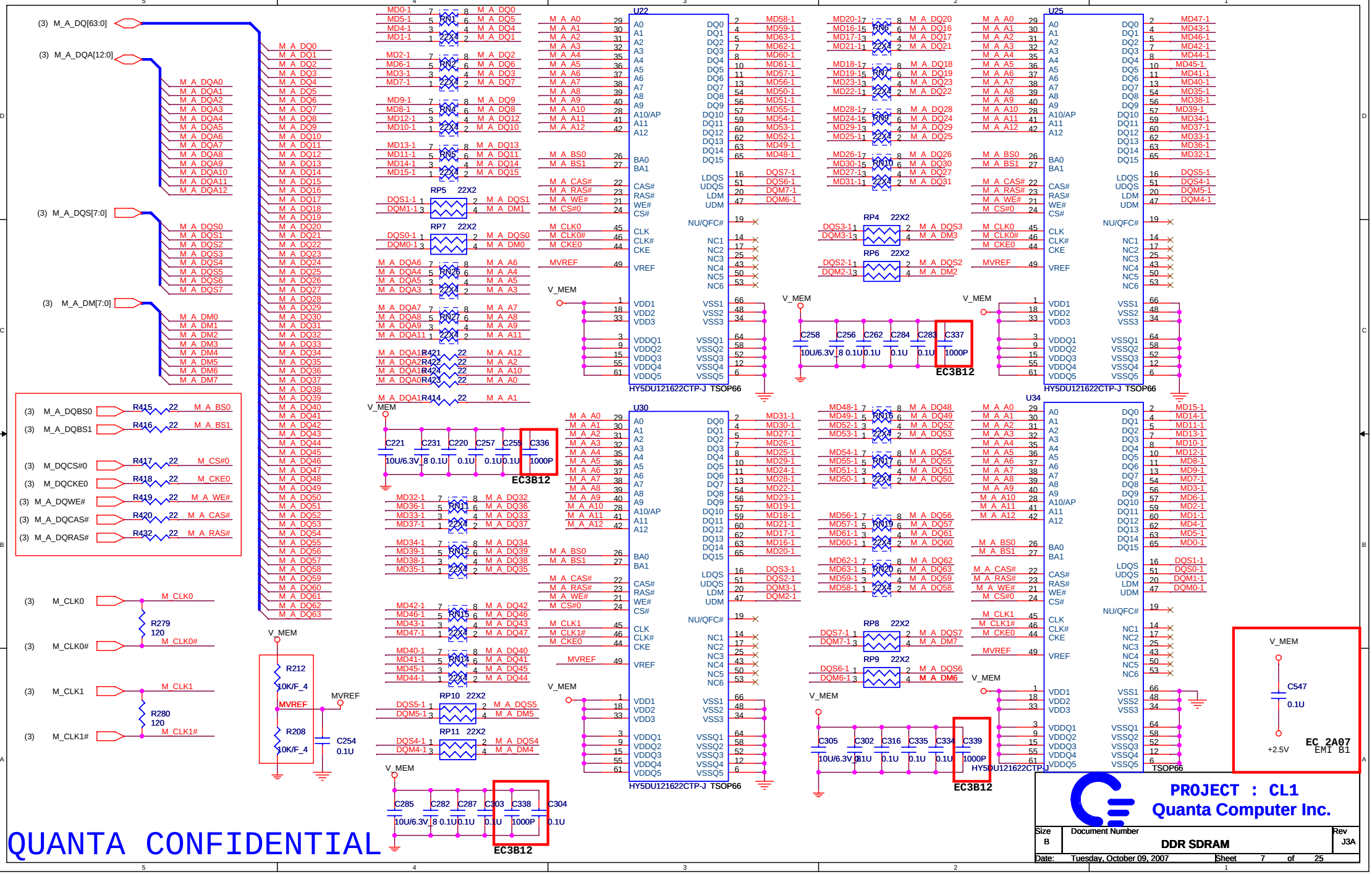

QUANTA CONFIDENTIAL

PROJECT : CL1
Quanta Computer Inc.

Size	Document Number	Rev
B	DDR SDRAM	J3A

Date: Tuesday, October 09, 2007 Sheet 7 of 25

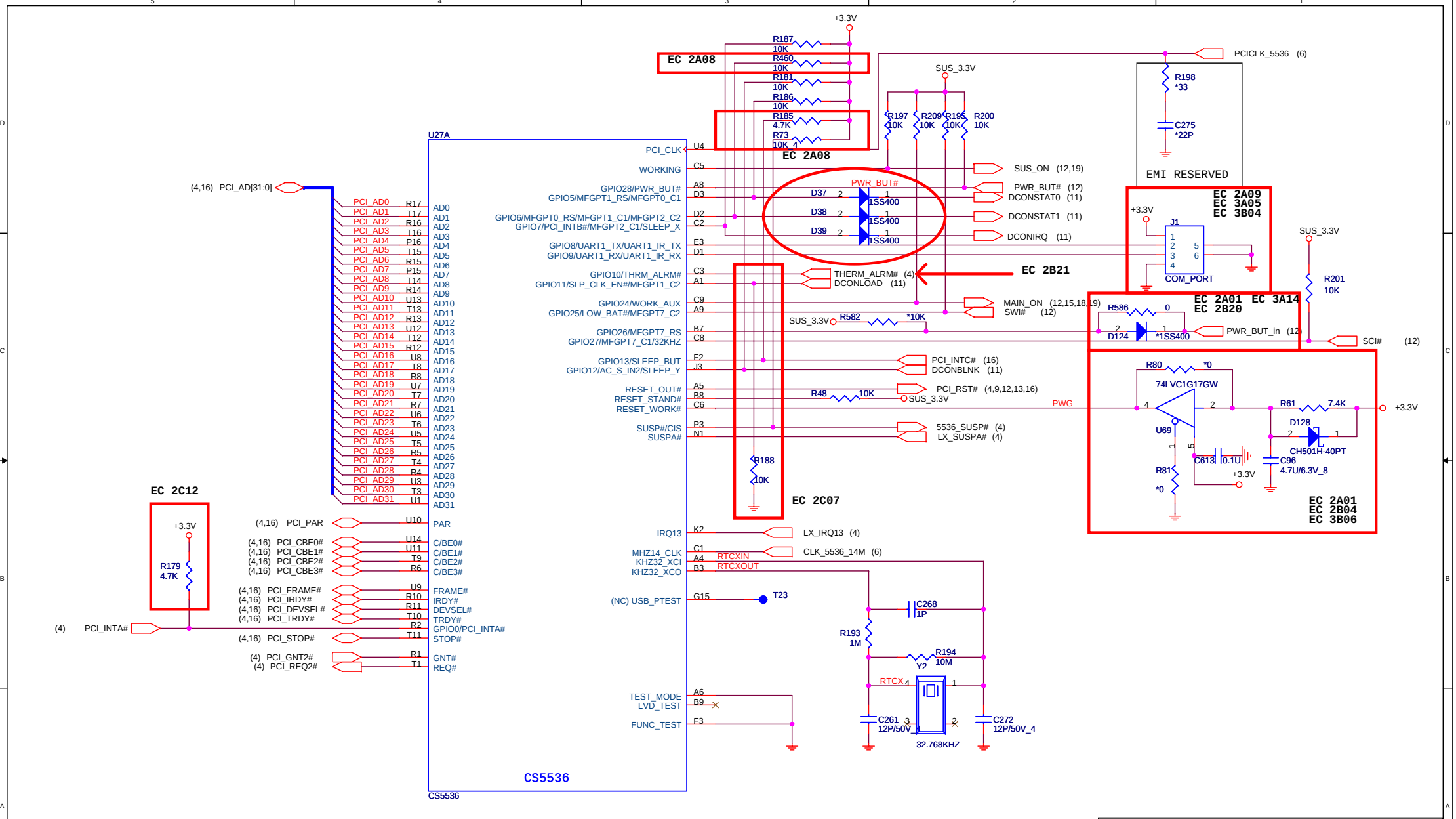

QUANTA CONFIDENTIAL

PROJECT : CL1
Quanta Computer Inc.

Size	Document Number	Rev
B	CS5536 PCI / Crystal	J3A

Date: Tuesday, October 09, 2007 Sheet 8 of 25

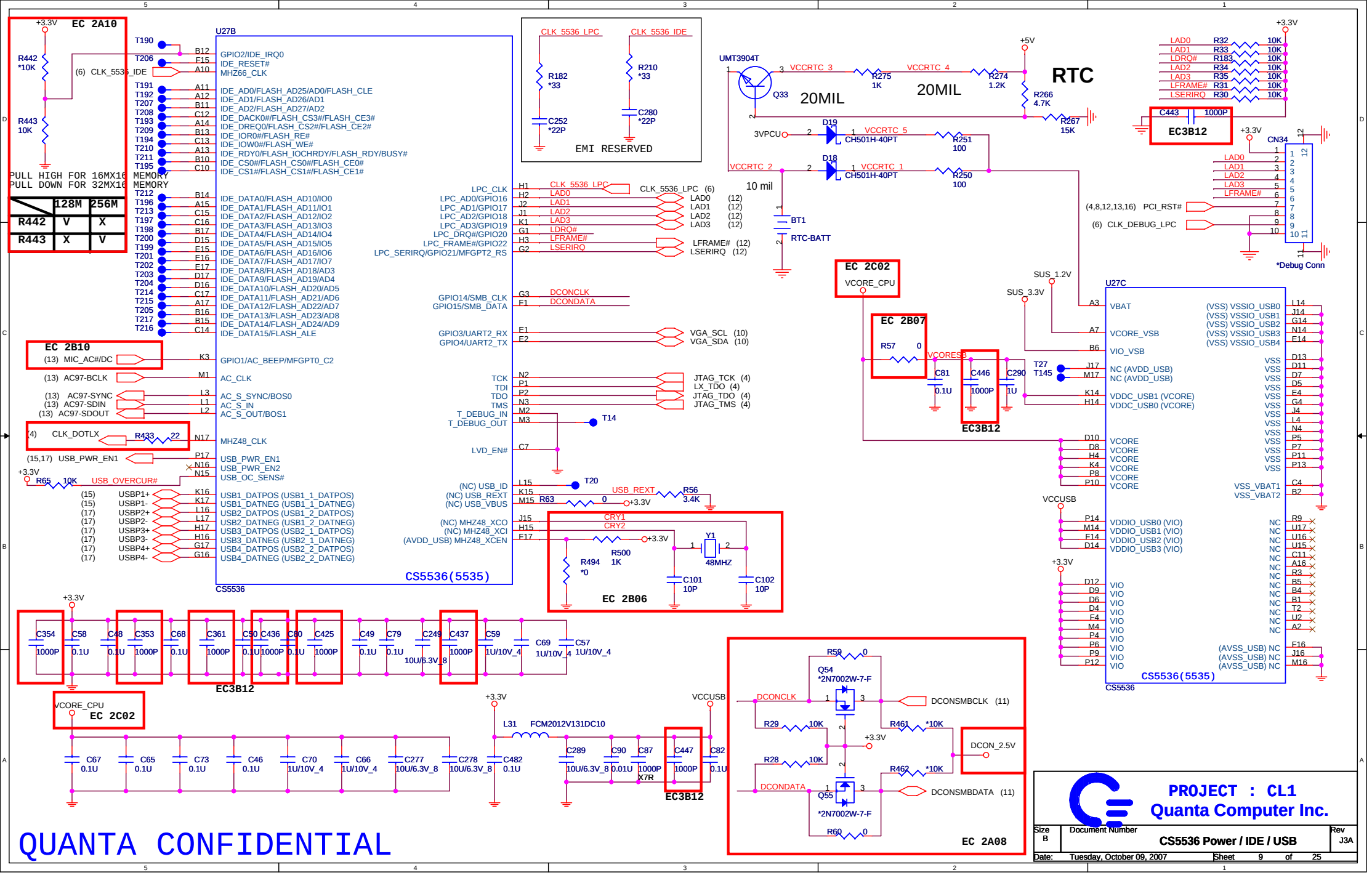

QUANTA CONFIDENTIAL

PROJECT : CL1
Quanta Computer Inc.

Size	Document Number	Rev
B	CS5536 Power / IDE / USB	J3A

Date: Tuesday, October 09, 2007 Sheet 9 of 25

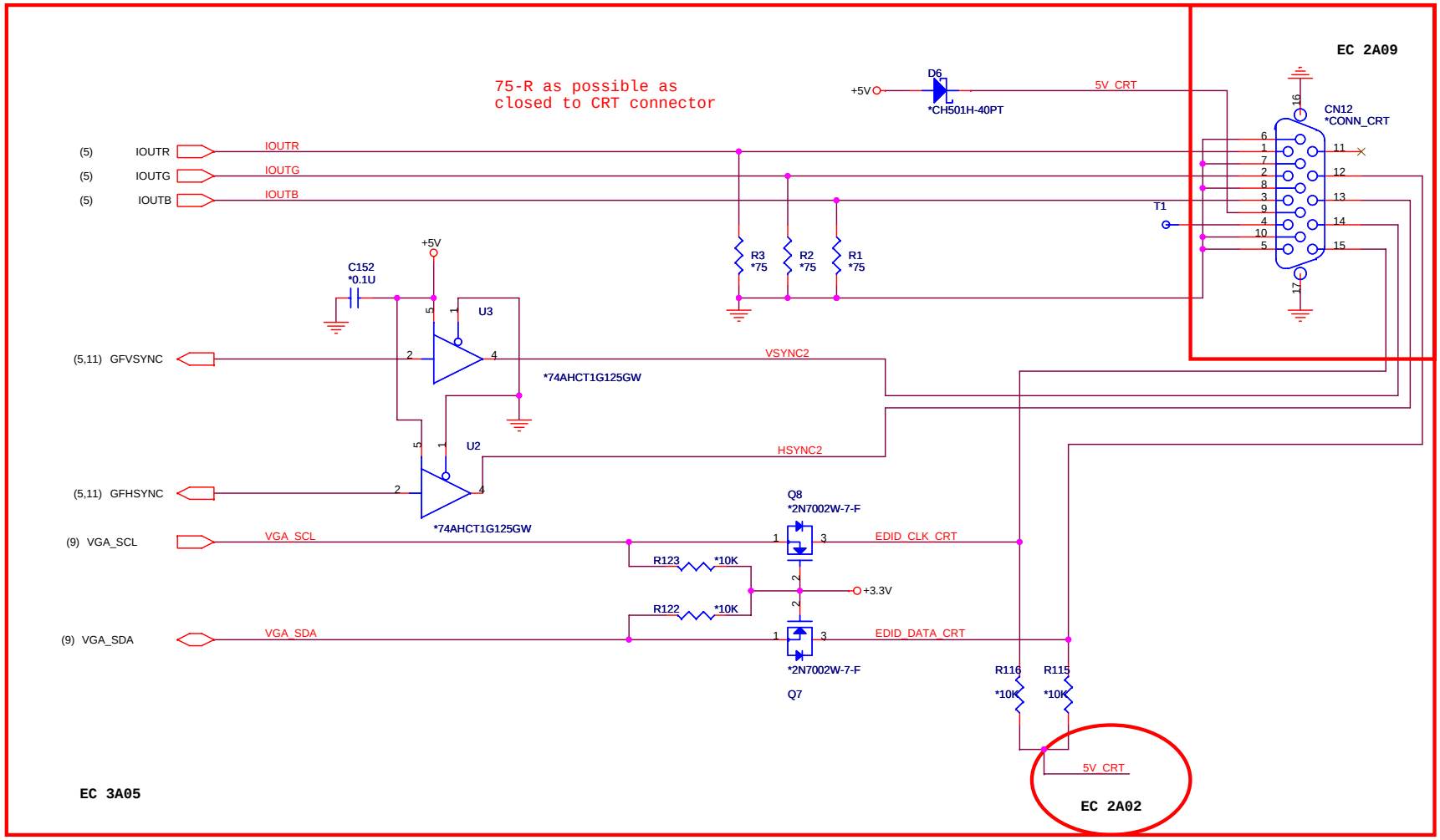

QUANTA CONFIDENTIAL

PROJECT : CL1 Quanta Computer Inc.		
Size B	Document Number CRT	Rev J3A
Date: Tuesday, October 09, 2007	Sheet 10 of 25	

Power control signal

	Net name	Power plane	Note
1	COLMODE	DCON_2.5V	VCOM select: High for VCOM-T and low for VCOM-R.
2	BACKLIGHT	DCON_2.5V	Pannel LED power control: High is enable.
3	DBC	DCON_2.5V	Pannel backlight control: PWM signal, F=200Hz
4	VDDEN	DCON_2.5V	LCD power control: High for turn on LCD_1.8V/VGL/LCD_AVDD/VCOM
5	VGH_EN	DCON_2.5V	VGH power control: High is enable.
6	XAO	LCD_1.8V	LCD gate discharge control

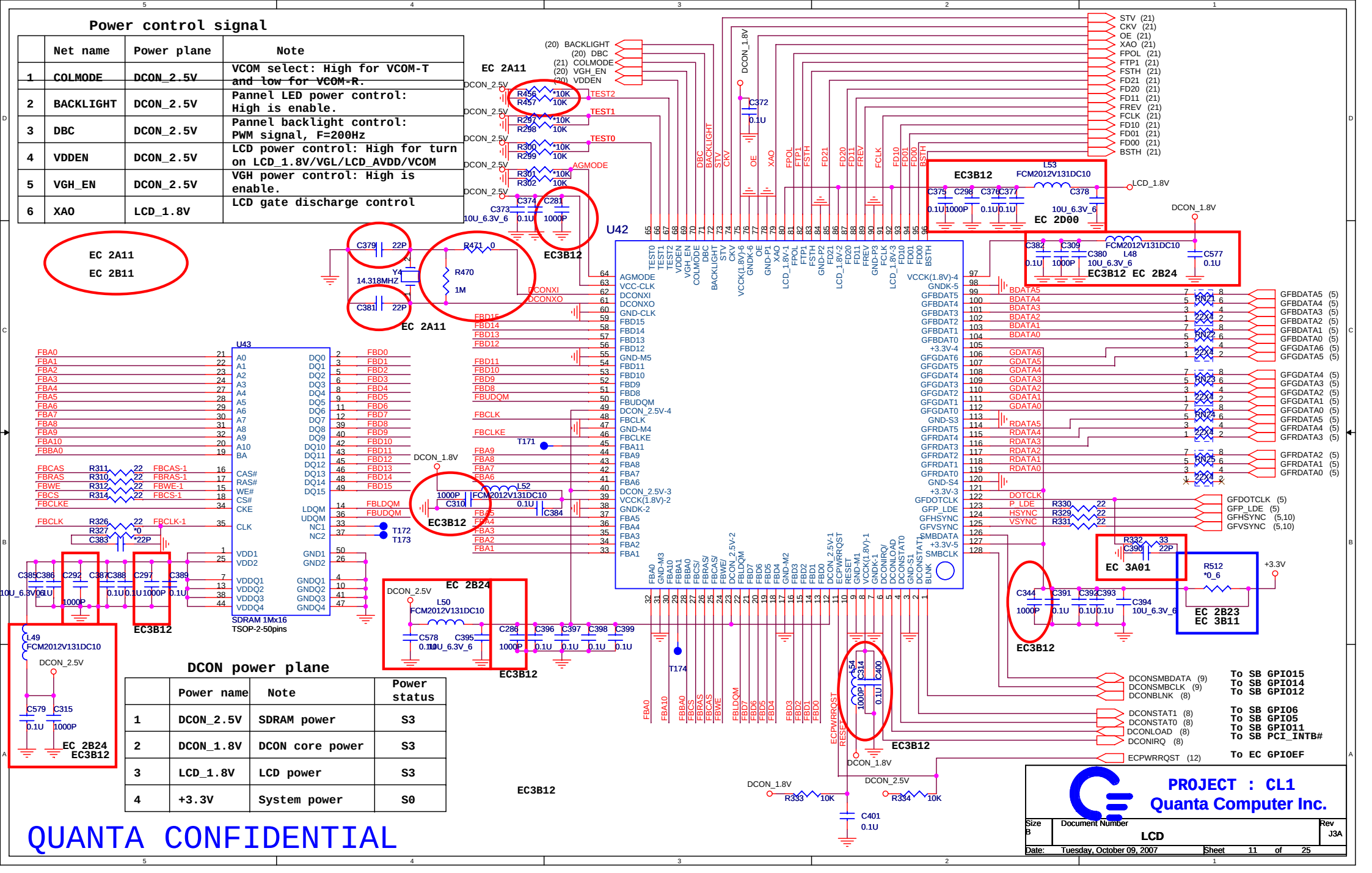

DCON power plane

	Power name	Note	Power status
1	DCON_2.5V	SDRAM power	S3
2	DCON_1.8V	DCON core power	S3
3	LCD_1.8V	LCD power	S3
4	+3.3V	System power	S0

QUANTA CONFIDENTIAL

PROJECT : CL1
Quanta Computer Inc.

Size	Document Number	Rev
B	LCD	J3A

Date: Tuesday, October 09, 2007 Sheet 11 of 25

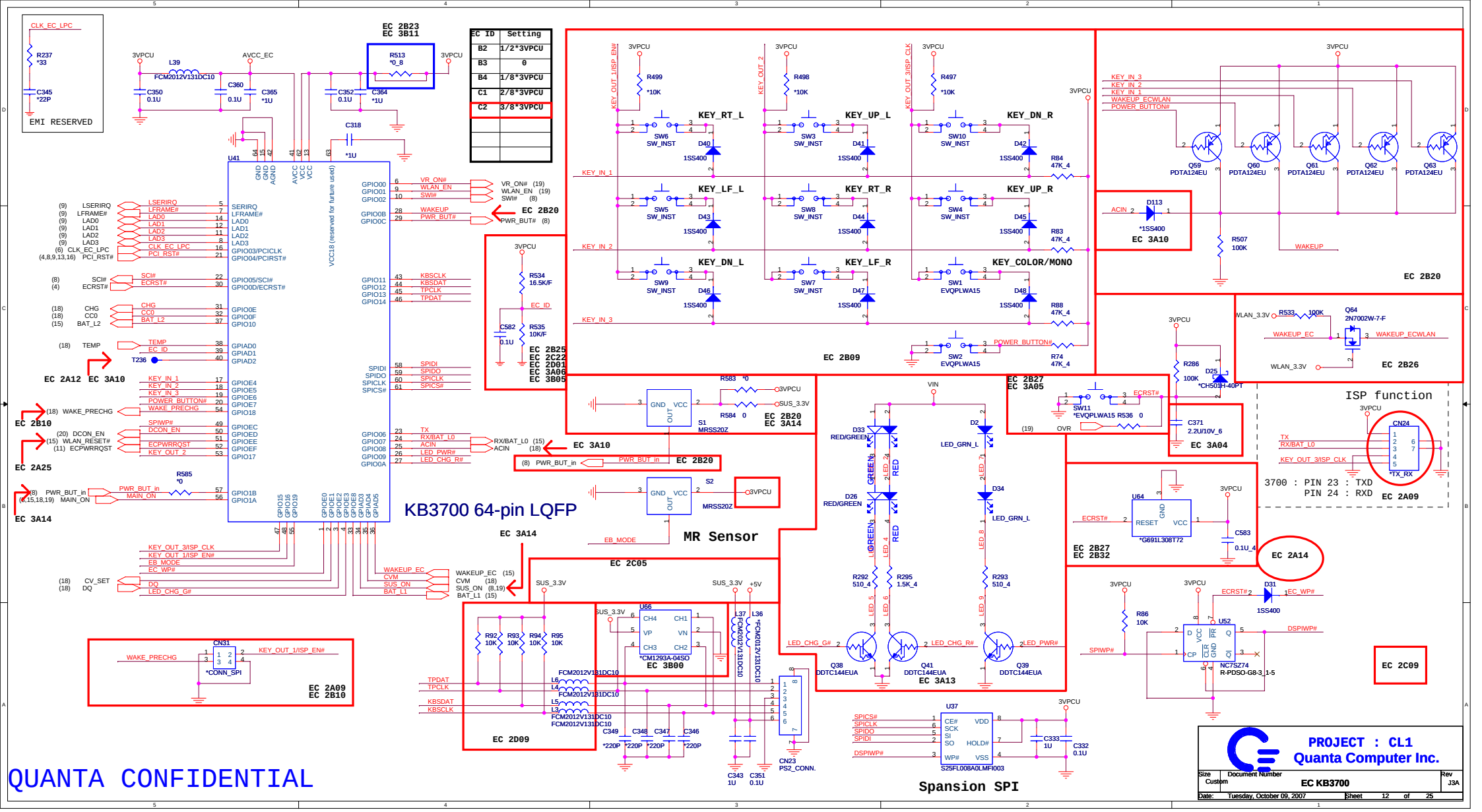

EC ID	Setting
B2	1/2*3VPCU
B3	0
B4	1/8*3VPCU
C1	2/8*3VPCU
C2	3/8*3VPCU

QUANTA CONFIDENTIAL

PROJECT : CL1
Quanta Computer Inc.

Size	Document Number	Rev
Custom	EC KB3700	J3A

Date: Tuesday, October 09, 2007 Sheet 12 of 25

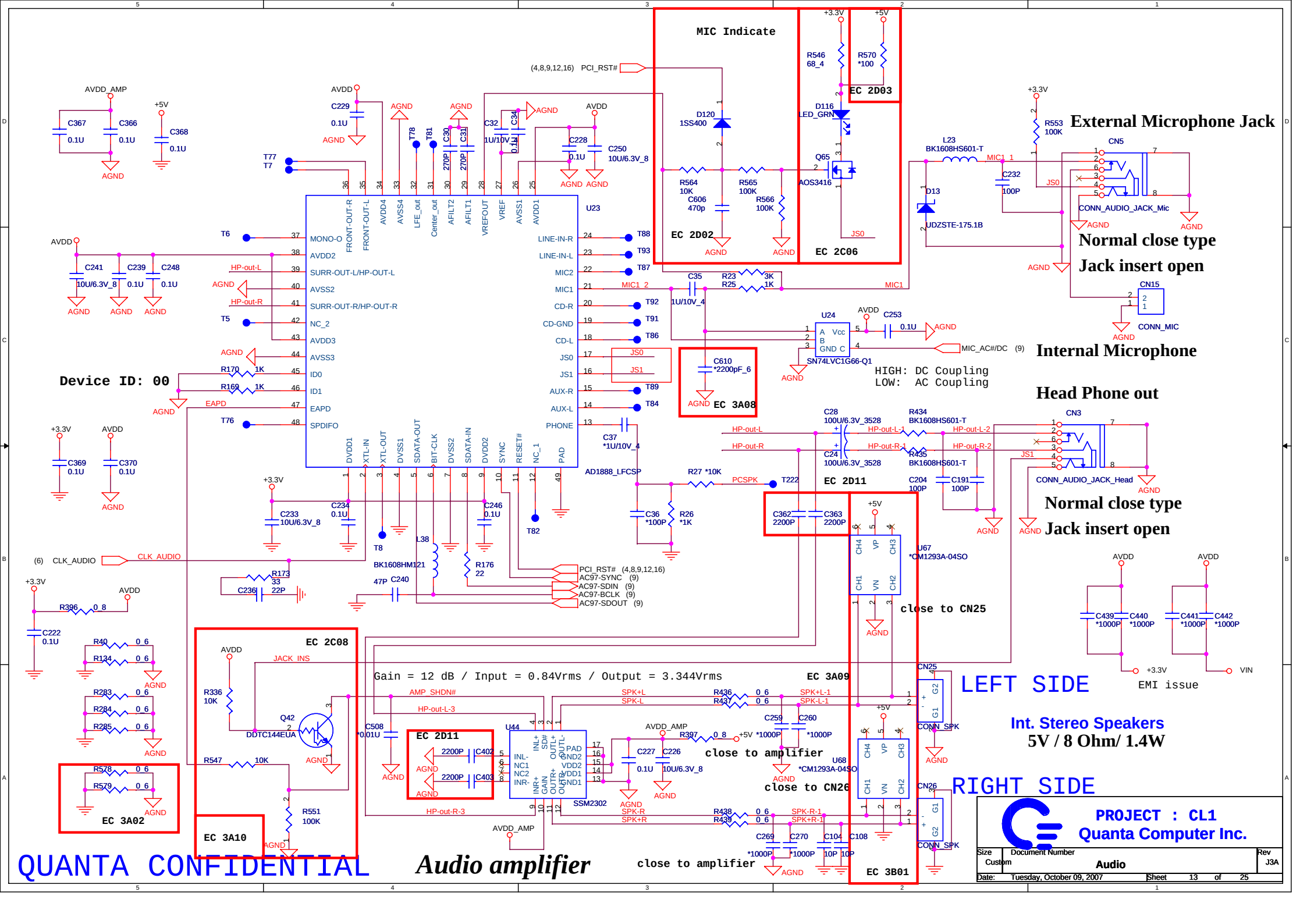
MIC Indicate
External Microphone Jack
Normal close type
Jack insert open
Internal Microphone
HIGH: DC Coupling
LOW: AC Coupling
Head Phone out
Normal close type
Jack insert open
Device ID: 00
Gain = 12 dB / Input = 0.84Vrms / Output = 3.344Vrms
close to CN25
close to amplifier
close to CN26
close to amplifier
LEFT SIDE
RIGHT SIDE
Int. Stereo Speakers
5V / 8 Ohm/ 1.4W
EMI issue
EC 2D03
EC 2D02
EC 2C06
EC 3A08
EC 2D11
EC 3A09
EC 2C08
EC 3A02
EC 3A10
EC 3B01
U23
AD1888_LFCSP
U24
SN74LVC1G66-Q1
U67
*CM1293A-04SO
U68
*CM1293A-04SO
U44
SSM2302
CN5
CONN_AUDIO_JACK_Mic
CN15
CONN_MIC
CN3
CONN_AUDIO_JACK_Head
CN25
CONN_SPK
CN26
CONN_SPK
QUANTA CONFIDENTIAL
Audio amplifier
PROJECT : CL1
Quanta Computer Inc.
Size Custom
Document Number
Audio
Rev J3A
Date: Tuesday, October 09, 2007
Sheet 13 of 25

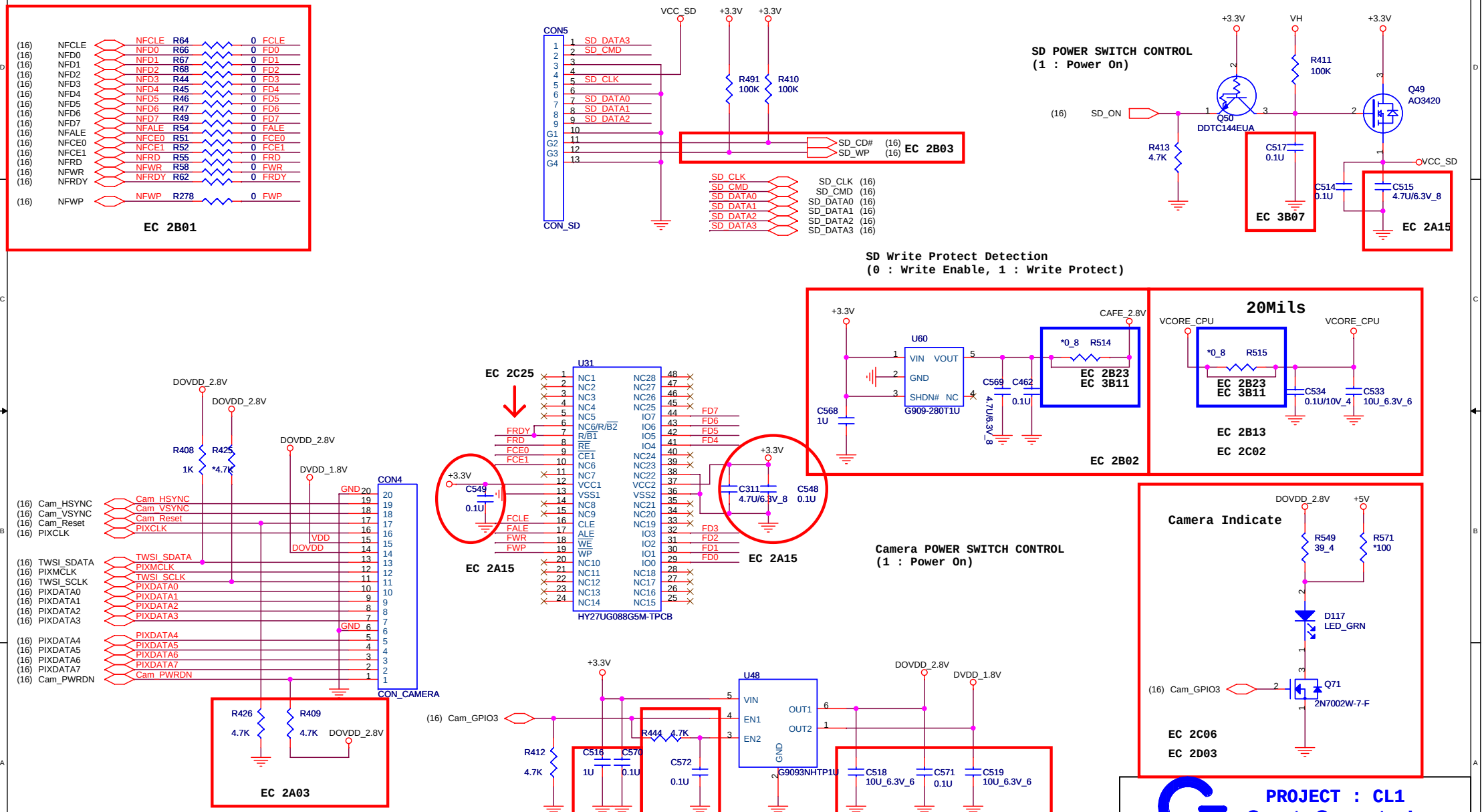
EC 2B01
NFCLE R64 0 FCLE
NFD0 R66 0 FD0
NFD1 R67 0 FD1
NFD2 R68 0 FD2
NFD3 R44 0 FD3
NFD4 R45 0 FD4
NFD5 R46 0 FD5
NFD6 R47 0 FD6
NFD7 R49 0 FD7
NFALE R54 0 FALE
NFCE0 R51 0 FCE0
NFCE1 R52 0 FCE1
NFRD R55 0 FRD
NFWR R58 0 FWR
NFRDY R62 0 FRDY
NFWP R278 0 FWP
CON5
CON_SD
VCC_SD
+3.3V
R491 100K
R410 100K
SD_DATA3
SD_CMD
SD_CLK
SD_DATA0
SD_DATA1
SD_DATA2
SD_CD#
SD_WP
EC 2B03
SD POWER SWITCH CONTROL
(1 : Power On)
SD_ON
Q50
DDTC144EUA
R413 4.7K
R411 100K
Q49
AO3420
C517 0.1U
C514 0.1U
C515 4.7U/6.3V_8
EC 3B07
EC 2A15
SD Write Protect Detection
(0 : Write Enable, 1 : Write Protect)
U60
VIN VOUT
GND
SHDN# NC
G909-280T1U
C568 1U
C569 4.7U/6.3V_8
C462 0.1U
CAFE_2.8V
*0_8 R514
EC 2B23
EC 3B11
EC 2B02
20Mils
VCORE_CPU
*0_8 R515
C534 0.1U/10V_4
C533 10U_6.3V_6
EC 2B13
EC 2C02
EC 2C25
U31
HY27UG088G5M-TPCB
FRDY
FRD
FCE0
FCE1
FCLE
FALE
FWR
FWP
FD7
FD6
FD5
FD4
FD3
FD2
FD1
FD0
C549 0.1U
C311 4.7U/6.3V_8
C548 0.1U
EC 2A15
DOVDD_2.8V
DVDD_1.8V
R408 1K
R425 *4.7K
CON4
CON_CAMERA
Cam_HSYNC
Cam_VSYNC
Cam_Reset
PIXCLK
TWSI_SDATA
PIXMCLK
TWSI_SCLK
PIXDATA0
PIXDATA1
PIXDATA2
PIXDATA3
PIXDATA4
PIXDATA5
PIXDATA6
PIXDATA7
Cam_PWRDN
GND
VDD
DOVDD
R426 4.7K
R409 4.7K
EC 2A03
Camera POWER SWITCH CONTROL
(1 : Power On)
Camera Indicate
R549 39_4
R571 *100
D117
LED_GRN
Q71
2N7002W-7-F
Cam_GPIO3
EC 2C06
EC 2D03
U48
VIN
EN1
EN2
OUT1
OUT2
G9093NHTP1U
R412 4.7K
R444 4.7K
C516 1U
C570 0.1U
C572 0.1U
C518 10U_6.3V_6
C571 0.1U
C519 10U_6.3V_6
EC 2B12
EC 3B07
EC 2A15
EC 2B12
QUANTA CONFIDENTIAL
PROJECT : CL1
Quanta Computer Inc.
Size B
Document Number
NAND Flash / SD / Camera
Rev J3A
Date: Tuesday, October 09, 2007
Sheet 14 of 25

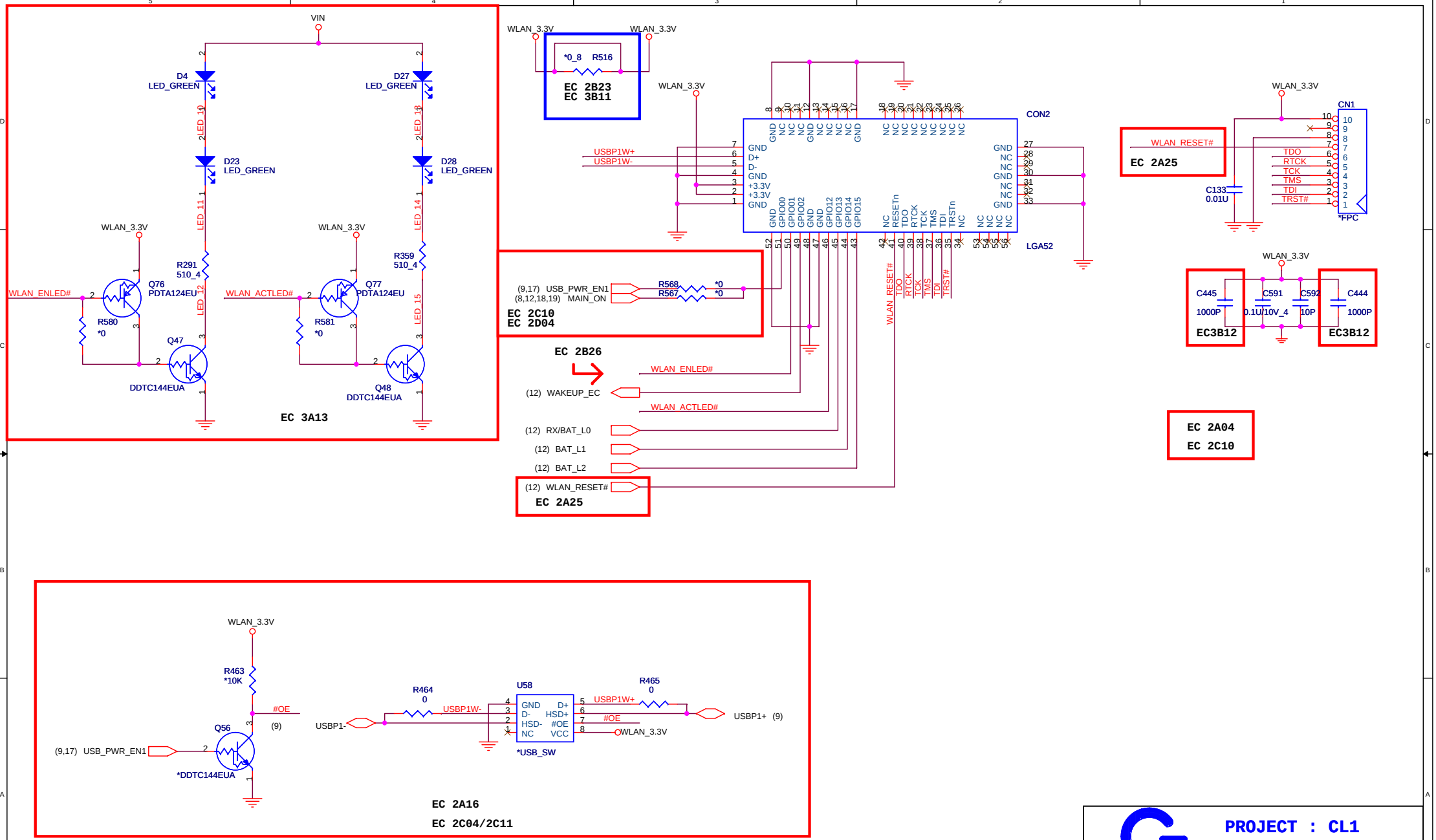

QUANTA CONFIDENTIAL

PROJECT : CL1
Quanta Computer Inc.

Size	Document Number	Rev
B	WLAN 88W8388	J3A

Date: Tuesday, October 09, 2007 Sheet 15 of 25

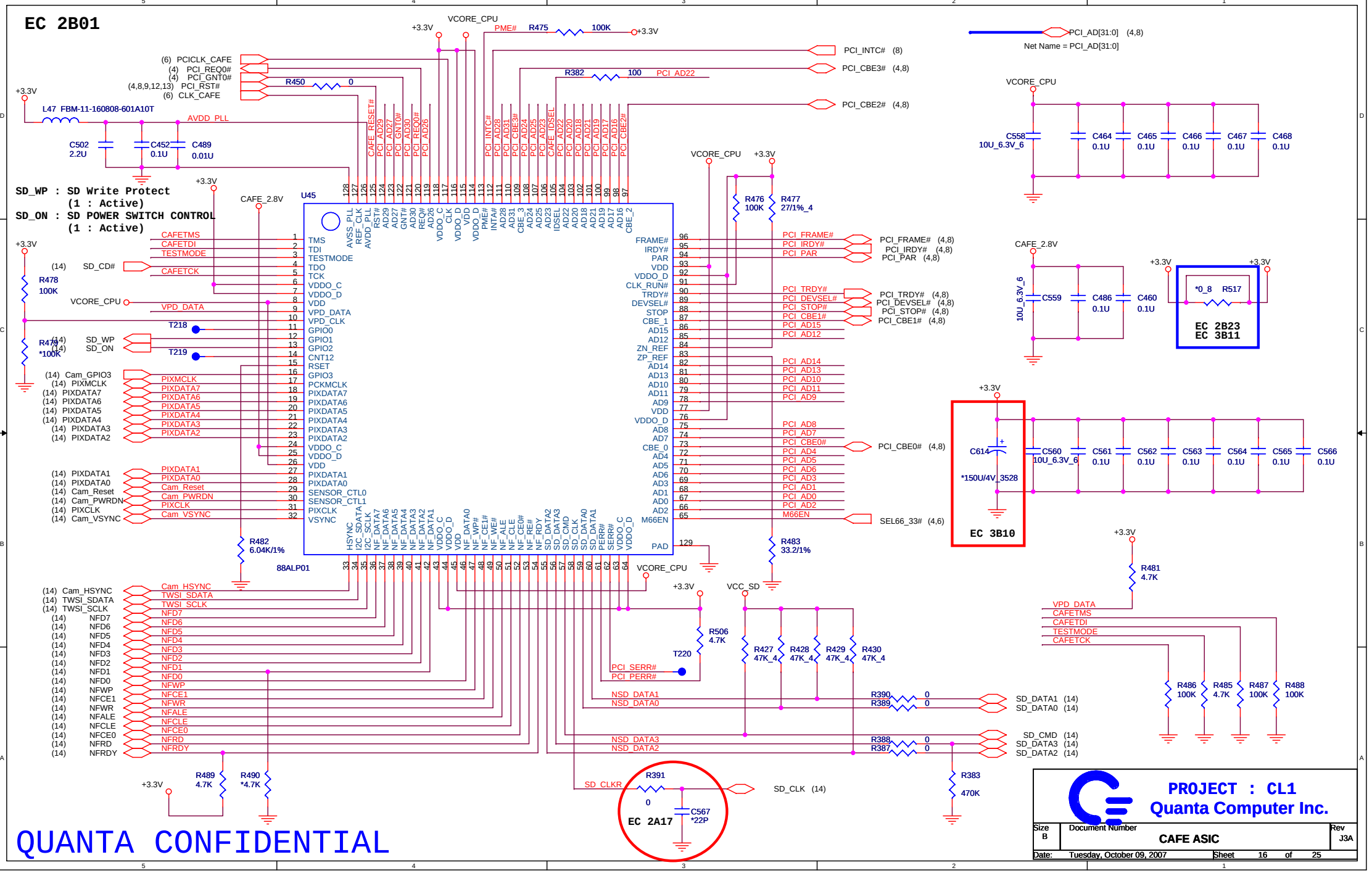
EC 2B01
SD_WP : SD Write Protect
(1 : Active)
SD_ON : SD POWER SWITCH CONTROL
(1 : Active)
U45
88ALP01
L47 FBM-11-160808-601A10T
AVDD_PLL
VCORE_CPU
+3.3V
CAFE_2.8V
PCI_AD[31:0] (4,8)
Net Name = PCI_AD[31:0]
EC 2B23
EC 3B11
EC 3B10
EC 2A17
SD_CLK (14)
SD_DATA1 (14)
SD_DATA0 (14)
SD_CMD (14)
SD_DATA3 (14)
SD_DATA2 (14)
SEL66_33# (4,6)
PCI_CBE0# (4,8)
PROJECT : CL1
Quanta Computer Inc.
Size B
Document Number
CAFE ASIC
Rev J3A
Date: Tuesday, October 09, 2007
Sheet 16 of 25
QUANTA CONFIDENTIAL

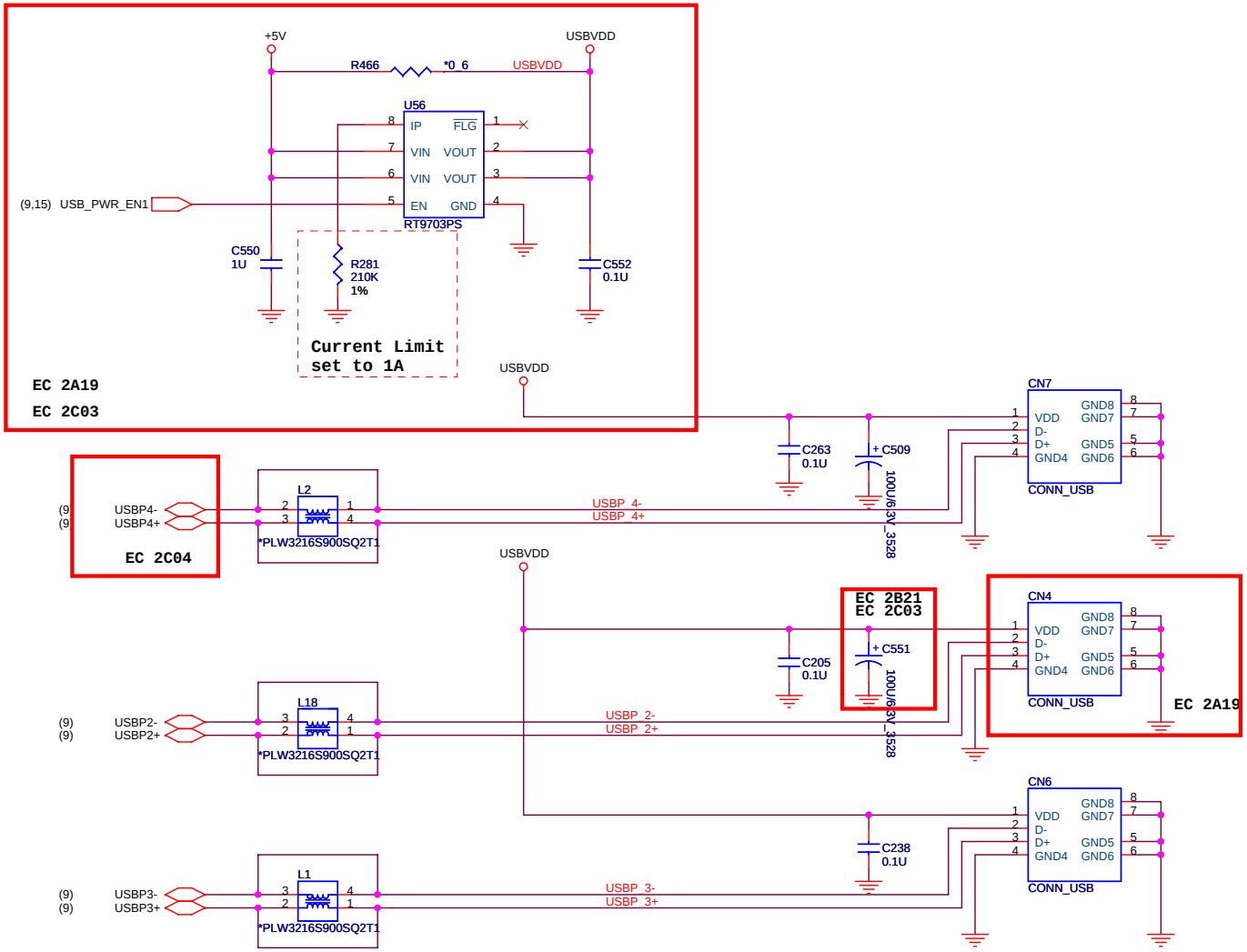

QUANTA CONFIDENTIAL

PROJECT : CL1
Quanta Computer Inc.

Size	Document Number	Rev
B	USB	J3A

Date: Tuesday, October 09, 2007 Sheet 17 of 25

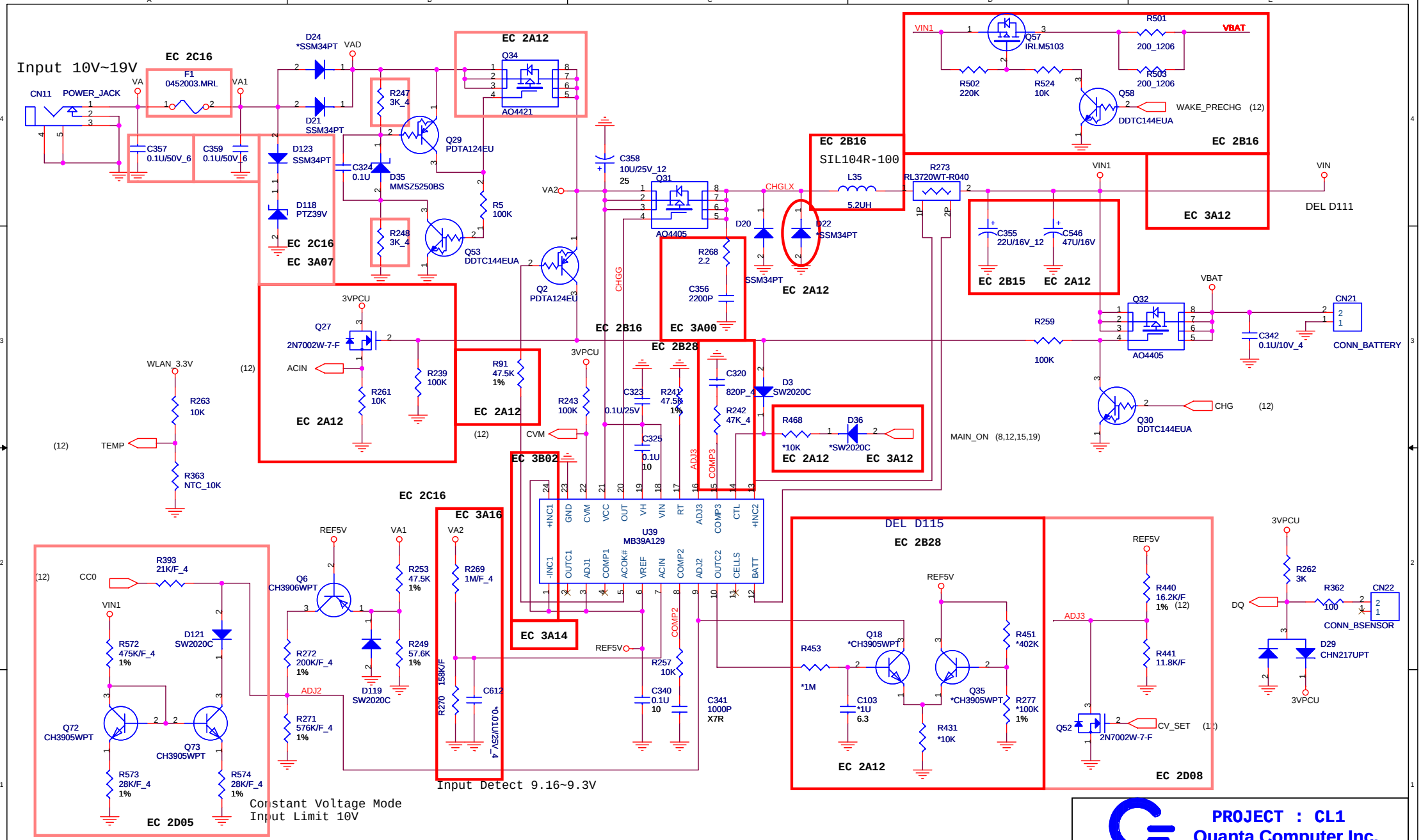

QUANTA CONFIDENTIAL

PROJECT : CL1
Quanta Computer Inc.

Size	Document Number	Rev
B	Charger	J3A

Date: Tuesday, October 09, 2007 Sheet 18 of 25

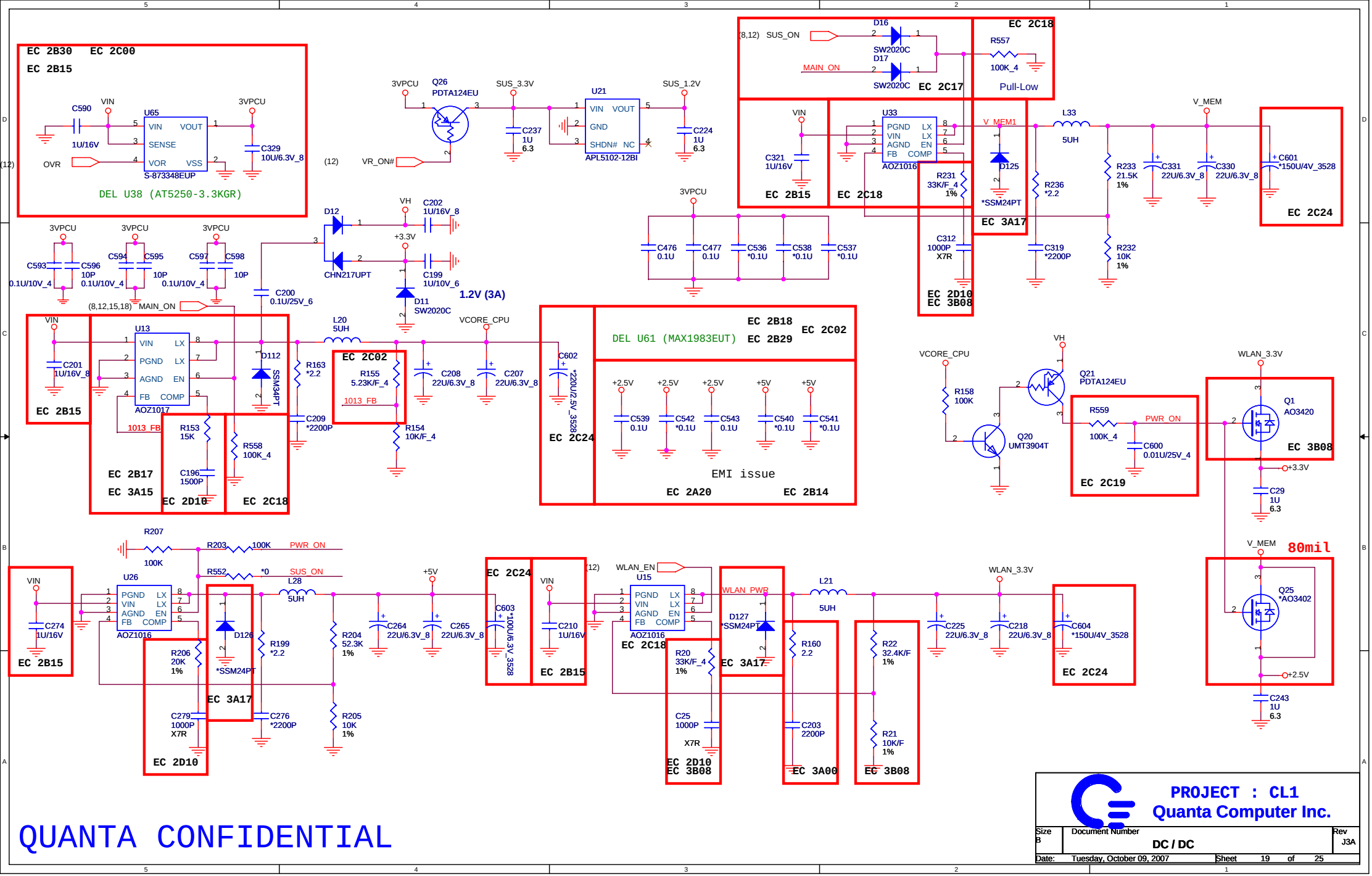
EC 2B30 EC 2C00
EC 2B15
U65
S-873348EUP
DEL U38 (AT5250-3.3KGR)
Q26
PDTA124EU
U21
APL5102-12BI
SUS_3.3V
SUS_1.2V
VR_ON#
SUS_ON
MAIN_ON
D16
D17
SW2020C
EC 2C17
EC 2C18
R557
100K_4
Pull-Low
U33
AOZ1016
V_MEM1
L33
5UH
V_MEM
EC 2C24
EC 2B15
EC 2C18
EC 3A17
EC 2D10
EC 3B08
D125
*SSM24PT
R231
33K/F_4
1%
R236
*2.2
R233
21.5K
1%
R232
10K
1%
C319
*2200P
C312
1000P
X7R
C331
22U/6.3V_8
C330
22U/6.3V_8
C601
*150U/4V_3528
3VPCU
D12
CHN217UPT
D11
SW2020C
1.2V (3A)
VH
C202
1U/16V_8
C199
1U/16V_6
C200
0.1U/25V_6
MAIN_ON
U13
AOZ1017
EC 2B17
EC 3A15
EC 2D10
EC 2C18
EC 2B15
D112
SSM34PT
R163
*2.2
L20
5UH
EC 2C02
R155
5.23K/F_4
1013_FB
R154
10K/F_4
R153
15K
C196
1500P
R558
100K_4
C209
*2200P
C208
22U/6.3V_8
C207
22U/6.3V_8
VCORE_CPU
C602
*220U/2.5V_3528
EC 2C24
DEL U61 (MAX1983EUT)
EC 2B18
EC 2B29
EC 2C02
+2.5V
+5V
EMI issue
EC 2A20
EC 2B14
Q21
PDTA124EU
R158
100K
Q20
UMT3904T
R559
100K_4
PWR_ON
C600
0.01U/25V_4
EC 2C19
WLAN_3.3V
Q1
AO3420
EC 3B08
+3.3V
C29
1U
6.3
V_MEM
80mil
Q25
*AO3402
+2.5V
C243
1U
6.3
R207
100K
R203
100K
R552
*0
SUS_ON
U26
AOZ1016
EC 2B15
C274
1U/16V
R206
20K
1%
D126
*SSM24PT
EC 3A17
C279
1000P
X7R
EC 2D10
R199
*2.2
C276
*2200P
L28
5UH
R204
52.3K
1%
R205
10K
1%
C264
22U/6.3V_8
C265
22U/6.3V_8
C603
*100U/6.3V_3528
EC 2C24
C210
1U/16V
EC 2B15
WLAN_EN
U15
AOZ1016
EC 2C18
WLAN_PWR
D127
*SSM24PT
EC 3A17
R20
33K/F_4
1%
C25
1000P
X7R
EC 2D10
EC 3B08
L21
5UH
R160
2.2
C203
2200P
EC 3A00
R22
32.4K/F
1%
R21
10K/F
1%
EC 3B08
C225
22U/6.3V_8
C218
22U/6.3V_8
C604
*150U/4V_3528
EC 2C24
QUANTA CONFIDENTIAL
PROJECT : CL1
Quanta Computer Inc.
Size B
Document Number
DC / DC
Rev J3A
Date: Tuesday, October 09, 2007
Sheet 19 of 25

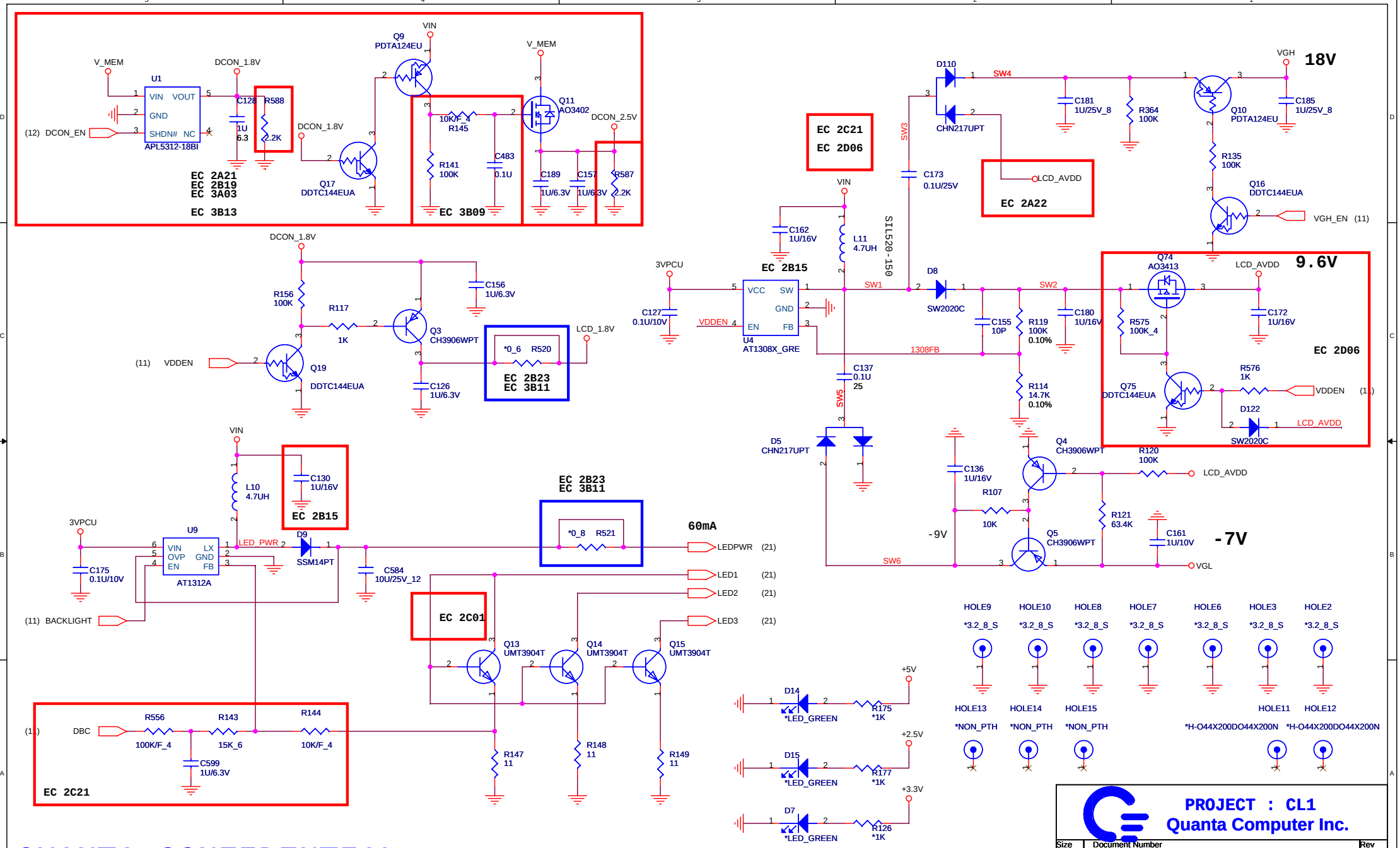
V_MEM
DCON_1.8V
U1
VIN VOUT
GND
SHDN# NC
APL5312-18BI
(12) DCON_EN
C128 1U 6.3
R588 2.2K
Q9 PDTA124EU
VIN
V_MEM
Q11 AO3402
DCON_2.5V
DCON_1.8V
Q17 DDTC144EUA
10K/F_4 R145
R141 100K
C483 0.1U
C189 1U/6.3V
C157 1U/6.3V
R587 2.2K
EC 2A21
EC 2B19
EC 3A03
EC 3B13
EC 3B09
DCON_1.8V
R156 100K
R117 1K
Q3 CH3906WPT
C156 1U/6.3V
(11) VDDEN
Q19 DDTC144EUA
C126 1U/6.3V
*0_6 R520
EC 2B23
EC 3B11
LCD_1.8V
VIN
L10 4.7UH
C130 1U/16V
EC 2B15
3VPCU
U9
VIN LX
OVP GND
EN FB
AT1312A
C175 0.1U/10V
(11) BACKLIGHT
LED_PWR
D9 SSM14PT
C584 10U/25V_12
EC 2B23
EC 3B11
*0_8 R521
60mA
LEDPWR (21)
LED1 (21)
LED2 (21)
LED3 (21)
EC 2C01
Q13 UMT3904T
Q14 UMT3904T
Q15 UMT3904T
(11) DBC
R556 100K/F_4
R143 15K_6
R144 10K/F_4
C599 1U/6.3V
EC 2C21
R147 11
R148 11
R149 11
D14 *LED_GREEN
R175 *1K
+5V
D15 *LED_GREEN
R177 *1K
+2.5V
D7 *LED_GREEN
R126 *1K
+3.3V
EC 2C21
EC 2D06
D110 CHN217UPT
SW4
SW3
C173 0.1U/25V
LCD_AVDD
EC 2A22
C181 1U/25V_8
R364 100K
VGH
18V
Q10 PDTA124EU
C185 1U/25V_8
R135 100K
Q16 DDTC144EUA
VGH_EN (11)
VIN
C162 1U/16V
L11 4.7UH
S11520-150
3VPCU
EC 2B15
C127 0.1U/10V
VDDEN
U4 AT1308X_GRE
VCC SW
GND
EN FB
SW1
D8 SW2020C
C155 10P
R119 100K 0.10%
C180 1U/16V
1308FB
C137 0.1U 25
SW5
R114 14.7K 0.10%
D5 CHN217UPT
Q74 AO3413
LCD_AVDD
9.6V
R575 100K_4
C172 1U/16V
EC 2D06
R576 1K
Q75 DDTC144EUA
VDDEN (11)
D122 SW2020C
LCD_AVDD
Q4 CH3906WPT
R120 100K
LCD_AVDD
C136 1U/16V
R107 10K
-9V
Q5 CH3906WPT
R121 63.4K
C161 1U/10V
-7V
SW6
VGL
HOLE9 *3.2_8_S
HOLE10 *3.2_8_S
HOLE8 *3.2_8_S
HOLE7 *3.2_8_S
HOLE6 *3.2_8_S
HOLE3 *3.2_8_S
HOLE2 *3.2_8_S
HOLE13 *NON_PTH
HOLE14 *NON_PTH
HOLE15 *NON_PTH
HOLE11 *H-O44X200DO44X200N
HOLE12 *H-O44X200DO44X200N
PROJECT : CL1
Quanta Computer Inc.
Size B
Document Number
VEE / BL
Rev J3A
Date: Tuesday, October 09, 2007
Sheet 20 of 25
QUANTA CONFIDENTIAL

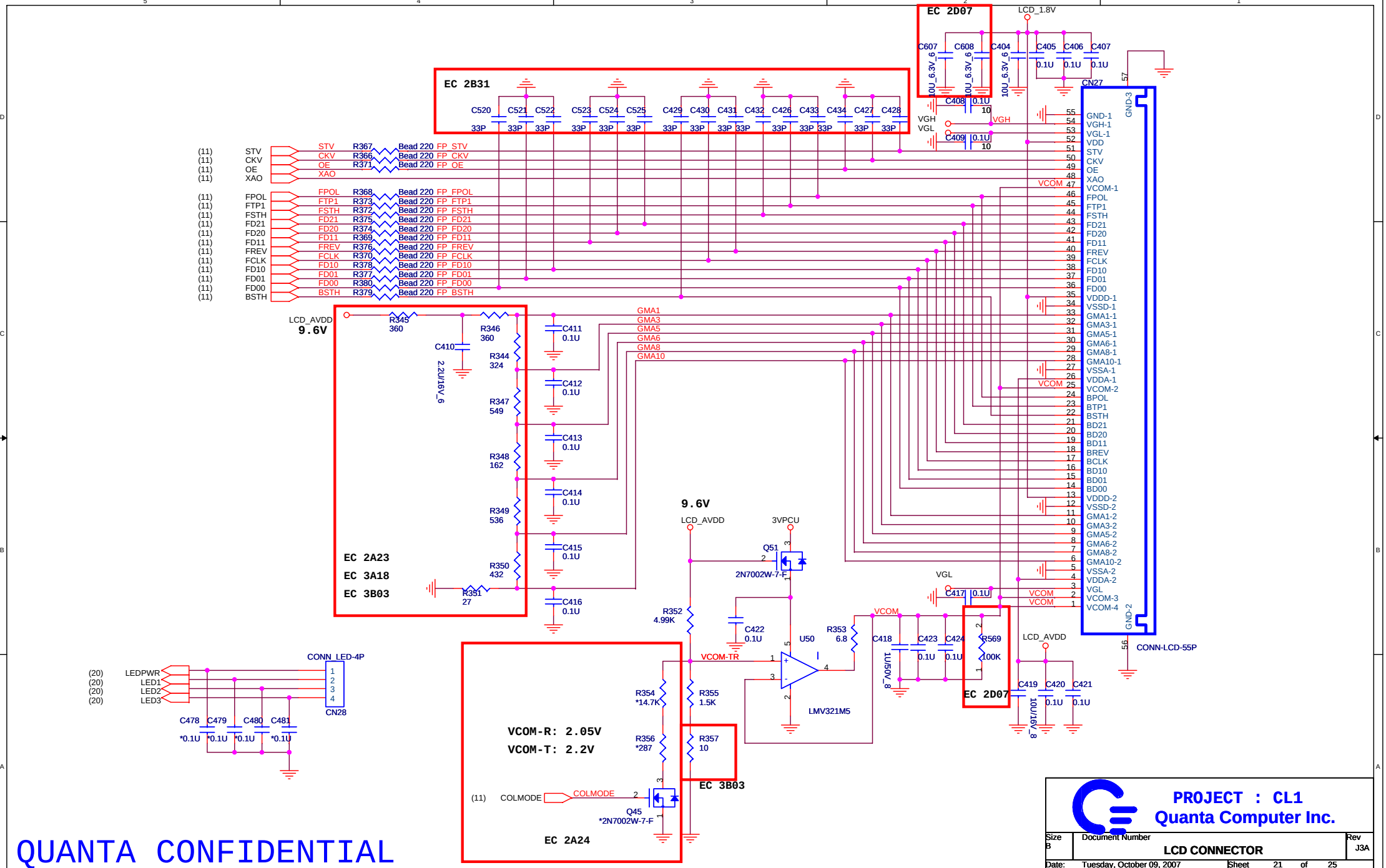
EC 2D07
LCD_1.8V
C607 10U_6.3V_6
C608 10U_6.3V_6
C404 10U_6.3V_6
C405 0.1U
C406 0.1U
C407 0.1U
C408 0.1U 10
C409 0.1U 10
VGH
VGL
CN27
CONN-LCD-55P
GND-1
VGH-1
VGL-1
VDD
STV
CKV
OE
XAO
VCOM-1
FPOL
FTP1
FSTH
FD21
FD20
FD11
FREV
FCLK
FD10
FD01
FD00
VDDD-1
VSSD-1
GMA1-1
GMA3-1
GMA5-1
GMA6-1
GMA8-1
GMA10-1
VSSA-1
VDDA-1
VCOM-2
BPOL
BTP1
BSTH
BD21
BD20
BD11
BREV
BCLK
BD10
BD01
BD00
VDDD-2
VSSD-2
GMA1-2
GMA3-2
GMA5-2
GMA6-2
GMA8-2
GMA10-2
VSSA-2
VDDA-2
VGL
VCOM-3
VCOM-4
GND-2
GND-3
EC 2B31
C520 33P
C521 33P
C522 33P
C523 33P
C524 33P
C525 33P
C429 33P
C430 33P
C431 33P
C432 33P
C426 33P
C433 33P
C434 33P
C427 33P
C428 33P
(11) STV
(11) CKV
(11) OE
(11) XAO
(11) FPOL
(11) FTP1
(11) FSTH
(11) FD21
(11) FD20
(11) FD11
(11) FREV
(11) FCLK
(11) FD10
(11) FD01
(11) FD00
(11) BSTH
R367 Bead 220 FP_STV
R366 Bead 220 FP_CKV
R371 Bead 220 FP_OE
R368 Bead 220 FP_FPOL
R373 Bead 220 FP_FTP1
R372 Bead 220 FP_FSTH
R375 Bead 220 FP_FD21
R374 Bead 220 FP_FD20
R369 Bead 220 FP_FD11
R376 Bead 220 FP_FREV
R370 Bead 220 FP_FCLK
R378 Bead 220 FP_FD10
R377 Bead 220 FP_FD01
R380 Bead 220 FP_FD00
R379 Bead 220 FP_BSTH
LCD_AVDD
9.6V
R345 360
R346 360
C410 2.2U/16V_6
R344 324
R347 549
R348 162
R349 536
R350 432
R351 27
C411 0.1U
C412 0.1U
C413 0.1U
C414 0.1U
C415 0.1U
C416 0.1U
GMA1
GMA3
GMA5
GMA6
GMA8
GMA10
EC 2A23
EC 3A18
EC 3B03
9.6V
LCD_AVDD
3VPCU
Q51
2N7002W-7-F
R352 4.99K
C422 0.1U
U50
LMV321M5
VCOM-TR
R353 6.8
VCOM
C418 1U/50V_8
C423 0.1U
C424 0.1U
VGL
C417 0.1U
R569 100K
EC 2D07
LCD_AVDD
C419 10U/16V_8
C420 0.1U
C421 0.1U
CONN_LED-4P
(20) LEDPWR
(20) LED1
(20) LED2
(20) LED3
CN28
C478 *0.1U
C479 *0.1U
C480 *0.1U
C481 *0.1U
R354 *14.7K
R355 1.5K
R356 *287
R357 10
EC 3B03
VCOM-R: 2.05V
VCOM-T: 2.2V
(11) COLMODE
COLMODE
Q45
*2N7002W-7-F
EC 2A24
QUANTA CONFIDENTIAL
PROJECT : CL1
Quanta Computer Inc.
Size B
Document Number
LCD CONNECTOR
Rev J3A
Date: Tuesday, October 09, 2007
Sheet 21 of 25

CL1 Schematic EC Tracking Record A (for [PreB] --> [B1])Oct. 17, 2006

EC #/Page/Description

EC 2A01/Page 8,16/Add buffer logic IC U55 and Delete D32,R449 and R450 pop 0 Ohm ,De-pop R43,C56 for CAFE Reset circuit.
EC 2A02/Page 10/Change R115,R116 pull up to 5V_CRT for current leakage.
EC 2A03/Page 14/Modify Camera PWDN/RESET pull up/down resistor R409,R426 4.7KOhm.
EC 2A04/Page 15/Delete U54, Add R452 10K Ohm for wireless wake up control circuit.
EC 2A05/Page 17/Change R402 from 10K to 100K Ohm for CAFE DOWN.
EC 2A06/Page 06/Seperate CLK_GND and GND. Add R454,R455 0Ohm.
EC 2A07/Page 07/Add C547 0.1uF for EMI.
EC 2A08/Page 08,09/Add R460/R461/R462 10K,D37/D38/D39 1SS400, Q54/Q55 2N7002 for DCON leakage.
EC 2A09/Page 08,10,12,17/De-pop J1/CN2/CN31/CN24/CN34 for build.
EC 2A10/Page 9/POP R442 for DDR 128MB, POP R443 for DDR 256MB.
EC 2A11/Page 11/Add R470 1MOhm,R471 0Ohm. Change C379/C381 to 22pF for DCON XTAL circuit. Add R456(DE-POP)/R457(POP) 10K Ohm for DCON seting.
EC 2A12/Page 12,19/Modify charger circuit.
EC 2A13/Page 12/Left switch SW3/SW5/SW6/SW9 change to PAD.
EC 2A14/Page 12/Add D33,D34. Change R295/R407 to 1K Ohm. Delete CN29/C436/C437/C438 for Power/Charge LED.
EC 2A15/Page 14/Add C548/C549 0.1uF,Change C311/C515/C518/C519 to 4.7uF for backup capacitor.
EC 2A16/Page 15/Add U58,Q56 DTC144EU,R463 10K Ohm for wireless USB switch.
EC 2A17/Page 16/Change R391 to 0 Ohm,De-pop C483.
EC 2A18/Page 17/Delete C460/C462/C452/C486/C489/C501/C504/C505.
EC 2A19/Page 18/Add U56/U57/C550/C553/C554/C551 for separate USB power. CN4 change connector part.
EC 2A20/Page 20/Separate power plant capacitor .
EC 2A21/Page 21/Pop R459 0 Ohm, De-pop U1 for DCON1.8V connect to DCON_2.5V
EC 2A22/Page 21/Change circuit for panel leakage
EC 2A23/Page 23/Change R345-R351 value for display gamma.
EC 2A24/Page 23/De-pop R354,R356,Q45 for Disable Color Mode control circuit
EC 2A25/Page 12,15/EC pin51 connect to wireless module pin 41 RESET# for reset wireless.

CL1 Schematic EC Tracking Record B (for [B1] --> [B2])Dec. 7, 2006

EC #/Page/Description/Ticket#/(ECO#)

EC 2B01/Page 14,16/Change CAFE FPGA to ASIC Design and NAND Flash damping change to 0Ohm.
EC 2B02/Page 14/Add U60,C568,C569,C462 for CAFE ASIC 2.8V power plant
EC 2B03/Page 14/Change SD card CD# and WP# pin define.
EC 2B04/Page 8/Remove U55,R432,C545 for CAFE ASIC. Pop R43 1K Ohm, C56 2200pF.
EC 2B05/Page 6/Add R493 1K pull up for Clock GEN PWD#, control by +3.3V rail.
EC 2B06/Page 9/Change 48MHz circuit for AMD required.
EC 2B07/Page 9/Change R57 from 4.7Ohm to 0Ohm for AMD required.
EC 2B08/Page 6/Add R495,R496 and pop R495 for enable PCI CLK to 66MHz.
EC 2B09/Page 12/Add D40,D41,D42,D43,D44,D45,D46,D47,D48,AND pull high resister R497,R498,R499 to prevent gamepad ghost key.
EC 2B10/Page 8,12/Move MIC_AC#/DC signal from EC to SB ,add WAKE_PRECHG signal control battery switchfor fix battery low can't boot.
EC 2B11/Page 11/Remove U59,R472,R473,R474,C556 for DCON OSC circuit.
EC 2B12/Page 14/Change C518,C519 to 10uF. Add C570,C571 for improve camera power noise.
EC 2B13/Page 14/Change CAFE 1.2V LDO suport 300mA.
EC 2B14/Page 6,20/Change R381 to 120Ohm bead, pop C435 15pF,C539,C543 0.1uF for EMI solution.
EC 2B15/Page 19,20,21/Change C546,C355,C339,C321,C201,C274,C210,C162,C130 voltage rating to 16V.
EC 2B16/Page 19/Modify Power/Charger circuit.
EC 2B17/Page 20/Change U13 source to AOZ1013 and add D112 for add CPU Core power power consumption.
EC 2B18/Page 20/Change SB 1.2V power circuit.
EC 2B19/Page 21/Pop U1 and De-pop R459 recover DCON_1.8V.
EC 2B20/Page 8,12/Add wakup circuit for EC wakeup.
EC 2B21/Page 4/Add CPU thermal protect circuit
EC 2B22/Page 4/Add R522,R523 for M/B ID select.
EC 2B23/Page 11,12,14,15,16,21/Add R512 ~ R521 for current measure resistor.
EC 2B24/Page 11/Add L48,L49,L50,C577,C578,C579 for EMI solution.
EC 2B25/Page 12/Add R534,R535 and C582 for go to pin AD1 of EC for EC ID Pin .(ECO-CL1-HW-00001)
EC 2B26/Page 12/Add Q64,R533 to avoid EC can't entry stop mode when system in power off and WLAN no power.(ECO-CL1-HW-00001)
EC 2B27/Page 12/Change EC Reset solution to Reset IC U64 from RC avoid EC Hang up when battery voltage too low even AC plug in .(ECO-CL1-HW-00001)
EC 2B28/Page 19/Add D115 between U39 pin8 and pin15,change C320 from 680pF to 820p to reduce VIN overshoot
when battery chargering and remove the battery.(ECO-CL1-HW-00001)
EC 2B29/Page 20/Change U61 VBIAS source from VH for +5V unstable when turn on theUSB Power switch .(ECO-CL1-HW-00001)
EC 2B30/Page 20/Reserved U65 when Battery Voltage below 4.8V will turn off the 3VPCU Power output.
Avoid EC Hang up when battery voltage below 3.0V (EC Operating Voltage 3.0 ~ 3.6v).(ECO-CL1-HW-00001)
EC 2B31/Page 22/Change LCD interface for EMI apacitor C426 ~ C434,C520 ~ C525 from 47pF to 22pF for fix display garbage on B2 new panel.(ECO-CL1-HW-00002)
EC 2B32/Page 20/Remove U64 EC reset IC for avoid assert ECRST# when 3VPCU unstable.(ECO-CL1-HW-00003)

CL1 Schematic EC Tracking Record C (for [B2] --> [B3])April. 27, 2007)
EC #/Page/Description/#Ticket/(ECO#)

EC 2C00/Page 20/Remove U38 for improve 3VPCU voltage and add OVR for EC reset# / #543/(ECO-CL1-HW-00005)
EC 2C01/Page 21/Remove Q12 for avoid ESD damage./(ECO-CL1-HW-00005)
EC 2C02/Page 9,14,20/VCORE_CPU change to 1.2V for LX700, delete VCORE_SB power plant and connect to VCORE_CPU, delete CAFE_1.2V power plant and connect to VCORE_CPU./(E
EC 2C03/Page 18/Change U56 USB PWR SW for reduce inrush current./(ECO-CL1-HW-00005)
EC 2C04/Page 15,18/Swap USB1 and USB4 signal./ #1095/(ECO-CL1-HW-00005)
EC 2C05/Page 12/Change PS/2 power plant to 3VSUS for KB/TP S3 wakeup function./ #1094/(ECO-CL1-HW-00005)
EC 2C06/Page 13,14/Add Mic/Camera indicate LED/(ECO-CL1-HW-00005)
EC 2C07/Page 8/Change R188 to pull down for DCON S3 function/ #947/(ECO-CL1-HW-00005)
EC 2C08/Page 13/Add a mosfet control AMP_SD# for pop noise/ #640,#977/(ECO-CL1-HW-00005)
EC 2C09/Page 12/Remove Q46,R395,R358,CN30 for delete keyboard light function/(ECO-CL1-HW-00005)
EC 2C10/Page 15/Remove CN33,R452,R365,C544 for delete WLAN wakeup enable switch function/(ECO-CL1-HW-00005)
EC 2C11/Page 15/Remove U58 USB analog switch for cost down./ #1085/(ECO-CL1-HW-00005)
EC 2C12/Page 3,4,5/change CPU from GX500 to LX700/(ECO-CL1-HW-00005)
EC 2C13/Page 4/Add R526,R525,R522,R540,R541 for CPU and Memory frequency hardware boot strap/(ECO-CL1-HW-00005)
EC 2C14/Page 4/Add R184,R538 for PCI bus frequency hardware boot strap/(ECO-CL1-HW-00005)
EC 2C15/Page 5/Rewire RGB TTL signal use MSB-aligned instead of LSB-aligned./ #336/(ECO-CL1-HW-00005)
EC 2C16/Page 19/Add 4A fuse and zener diode for DC input high surge voltage protect/(ECO-CL1-HW-00005)
EC 2C17/Page 20/Add D16/D17 for modify V_MEM power sequency same as 3.3V/(ECO-CL1-HW-00006)
EC 2C18/Page 20/Change AOZ1010 to AOZ1016 and add pull down resistor on pin6 EN pin/(ECO-CL1-HW-00006)
EC 2C19/Page 20/Add 100K/0.1uF RC for fix WLAN_3.3V voltage dip/(ECO-CL1-HW-00006)
EC 2C20/Page 21/Add LCD_AVDD short protect circuit/(ECO-CL1-HW-00006)
EC 2C21/Page 21/Add RC for analog control LCD backlight for fix choice noise/(ECO-CL1-HW-00006)
EC 2C22/Page 12/Setting EC_ID to 0 for B3 version/(ECO-CL1-HW-00006)
EC 2C23/Page 4/Add Q69 for voltage leakage from SB THERM_ALRM# in S3 mode/(ECO-CL1-HW-00006)
EC 2C24/Page 20/Add C601,C602,C603,C604 for reduce power plant voltage translation noise/(ECO-CL1-HW-00006)
EC 2C25/Page 14/Hynix/Micron is 2 die chip and Samsung/ST is 1 die chip, pin 6 define is diffeent. Hynix/Micron need to connect pin 6 to pin 7/(ECO-CL1-HW-00007)

CL1 Schematic EC Tracking Record D (for [B3] --> [B4])April. 27, 2007)
EC #/Page/Description/#Ticket/(ECO#)

EC 2D00/Page 11/LCD_1.8V have power noise in DCON power pin.Relocate C375,C376,C377 for each DCON power pin./(ECO-CL1-HW-00008)
EC 2D01/Page 12/Change EC_ID 1/8 X 3VPCU for B4 M/B ID. /(ECO-CL1-HW-00008)
EC 2D02/Page 13/Add control circuit in VREFOUT to control Microphone LED turn On/Off for Microphone LED indicate blink when suspen/resume./(ECO-CL1-HW-00008)
EC 2D03/Page 13,14/Reserve option for 5V higher luminous LED for Microphone/Camera LED indicate light./(ECO-CL1-HW-00008)
EC 2D04/Page 15/Reserve MAIN_ON and USB_PWR_EN1 signals to WLAN GPIO00 for isolate USB interface when S3 for voltage leakage./(ECO-CL1-HW-00008)
EC 2D05/Page 19/Modfiy battery charger current limit to dynamic mode for power consumption limit circuit from constant current to constant watt./(ECO-CL1-HW-00008)
EC 2D06/Page 21/Modify LCD_AVDD voltage short protect circuit, remove current limit circuit and add turn off LCD_AVDD control circuit./(ECO-CL1-HW-00008)
EC 2D07/Page 22/Power sequence modify add C607/C608 10uF for keep LCD_1.8V longer and add R569 100K to GND in VCOM power plant
for discharge quickly /(ECO-CL1-HW-00008)
EC 2D08/Page 20/Modify charger IC CV setting circuit for VIN have overshoot(around 15V) with 19V Adapter IN./(ECO-CL1-HW-00008)
EC 2D09/Page 12/Move PS2 interface pull up resritors to the other side of the bead for RFI issue./(ECO-CL1-HW-00008)
EC 2D10/Page 20/Change U33,U26,U15,U13 PWM IC COMP R C value for improve power plant transient response./(ECO-CL1-HW-00008)
EC 2D11/Page 13/Change Audio Amplify Cin(C362,C363,C402,C403) value to 2200pF for setting high-pass frequency to 480Hz.
/(ECO-CL1-HW-00008)
EC 2D12/Page 20/U13 AOZ1017 latch up function error, it'll change back to AOZ1013 and mount C602./(ECO-CL1-HW-00008)

CL1 Schematic EC Tracking Record E (for [B4] --> [C1])July 16, 2007)
EC #/Page/Description/#Ticket/(ECO#)

EC 3A00/Page 18,19/Populate R268/R160 2.2Ohm and C356/C203 2200pF for EMI solution./(ECO-CL1-HW-00009)
EC 3A01/Page 5,11/Move R328 near U28 and change to bead BK1608LL680 and add C609/22pF. Populate R332 33Ohm/C390 22pF for EMI solution./(ECO-CL1-HW-00009)
EC 3A02/Page 13/Add R578,R579 0Ohm resistors between AGND and GND for EMI solution./(ECO-CL1-HW-00009)
EC 3A03/Page 20/Modify DCON power sequence to DCON_1.8V lead DCON_2.5V power plant./(ECO-CL1-HW-00009)
EC 3A04/Page 12/Change C371 from 1uF to 2.2uF for EC Reset timing worst case issue./(ECO-CL1-HW-00009)
EC 3A05/Page 4,8,10/Depopulate R190,J1,SW11 and all of CRT page 10 parts for cost down./(ECO-CL1-HW-00009)
EC 3A06/Page 12/Change R534 to 30K_1% for change M/B ID to reversion C1./(ECO-CL1-HW-00009)
EC 3A07/Page 18/Add D123 serial with D118 39V zenor diode for adapter IN high voltage range protect./(ECO-CL1-HW-00009)
EC 3A08/Page 13/Add C610 6800pF between R25 and C35 to AGND for providing an antialiasing filter at the input to the A/D./(ECO-CL1-HW-00009)
EC 3A09/Page 13/Depopulate C510,C511,C512,C513 for the click in the speakers upon suspend/resume issue/ #1735/(ECO-CL1-HW-00009)
EC 3A10/Page 12,13/Change ACIN signal to EC GPIO8 and delete EC_EAPD signal and depopulate D113 for EC wake up function./(ECO-CL1-HW-00009)
EC 3A11/Page 4/Remove CPU JTAG Port connector CN16 for EMI solution./(ECO-CL1-HW-00009)
EC 3A12/Page 18/Depopulate D36,R468 and delete R252 and short VIN1 and VIN for eliminate the ability to measure the system current./(ECO-CL1-HW-00009)
EC 3A13/Page 12,15/Rewire the indicator LEDs for conserve power./(ECO-CL1-HW-00009)
EC 3A14/Page 12,18/Eliminating ISYS signal, move SUS_ON to EC GPAD3(pin34) and wire PWR_BUT_in to EC GPIO 1B(pin57) and populate R584,R586 for EC lid open/closed wake up function./(ECO-CL1-HW-00009)
EC 3A15/Page 19/Change U13 from AOZ1013 to AOZ1017 for disable latch function./(ECO-CL1-HW-00009)
EC 3A16/Page 18/Wire R269 to VA2 and change R269 and R270 to 1M and 158K, remove D1 and reserve C612/0.1uF for plugging in an XO with a low battery causes immediate poweroff and EC lockup/#2182/(ECO-CL1-HW-00009)
EC 3A17/Page 20/Reserved D125,D126,D127 for U33,U26,U15 AOZ1016 PWM 2nd source/(ECO-CL1-HW-00009).
EC 3A18/Page 22/Change R344 ~ R351 LCD gamma resistors value for reduce power consumption/(ECO-CL1-HW-00009).

CL1 Schematic EC Tracking Record F (for [C1] --> [C2])Aug 21, 2007)
EC #/Page/Description/#Ticket/(ECO#)

EC 3B00/Page 12/Reserved ESD protect diode on PS/2 interface.(ECO-CL1-HW-00011).
EC 3B01/Page 13/Reserved ESD protect diode on Speaker Out.(ECO-CL1-HW-00011).
EC 3B02/Page 18/Connect U39 charger IC pin 1&24 to REF5V for supplier suggest for unused pin.(ECO-CL1-HW-00011).
EC 3B03/Page 21/Change R345,R346,R347,R349,R350,R351,R357 for new LCD gamma value. (ECO-CL1-HW-00011).
EC 3B04/Page 8/Pop back J1 console port connector. (ECO-CL1-HW-00011).
EC 3B05/Page 12/Change R534 to 16.5K_1% for change M/B ID to reversion C2(ECO-CL1-HW-00011).
EC 3B06/Page 8 /Remove R43 and C56, Add U69 74LVC1G17GW,C96 4.7u ,R61 7.4K, C613 0.1u, D128 CH501H-40PT ,for South Bridge reset delay.
EC 3B07/Page 14/Change Q49 to AO3420 Add C517 0.1u for SD card power soft start ,Add R444 4.7K ,C572 0.1u for separate Camera 1.8V and 2.8V power-on sequence,to reduce inrush current .
EC 3B08/Page 19/Change Q1 to AO3420 for reduce +3.3V RDSon ,change R22 to 32.4K 1% for adjust +3.3V to 3.36V, Change R20 and R231 to 33K 1% for improve the transience response.
EC 3B09/Page 20/Add R145 10K,C483 0.1u for DCON power soft start.(ECO-CL1-HW-00011).
EC 3B10/Page 16/Reserved C614 150u for improve +3.3V quality.
EC 3B11/Page 11,12,14,15,16,21 /remove Q25 and ,R512,R513,R514,R515,R516,R517,R520,R521 (EC 2B23) current measure resister
EC 3B12/Page 4,7,9,11,15/Add 1000P cap on DCON_2.5V: C281,C286,C292,C297 LCD_1.8V: C298 DCON_1.8V :C309,C310,C314 VMEM: C315,C336,C337,C338,C339 +3.3V C344,C353,C354,C361,C425,C436,C437,C438,C443 WLAN_3.3V: C444,C445,VCORE_SB: C446 VCCUSB:C447.

EC 3B13/Page 20 /Add R587,588 2.2K resister for discharge DCON 1.8V,2.5V power.

PROJECT : CL1 Quanta Computer Inc.		
Size B	Document Number EC B4 --> C History	Rev J3A
Date: Tuesday, October 09, 2007	Sheet 25 of 25	